THE BRAIN® MODEL DRV50R

DIGITAL RECIRCULATION VALVE with RECIRCULATION MANIFOLD

Engineered exclusively for continuously recirculated hot water systems, DRV50R improves system performance and safety by delivering a consistent preset temperature to the points of use.

Innovative digital technology resists “temperature creep” during periods of zero system demand which eliminates the requirement for manual throttling valves, supplementary RTD or a temperature actuated switch to control the pump.

Energy efficient, low temperature loss systems can be implemented by the ability of DRV50R to operate with a system return differential of just 1° F below set point.

User safety and overall system health is maintained by a series of programmable temperature alerts, onboard operational self-diagnostics, and a thermal disinfection option.

DRV50R is equipped with a recirculation manifold assembly.

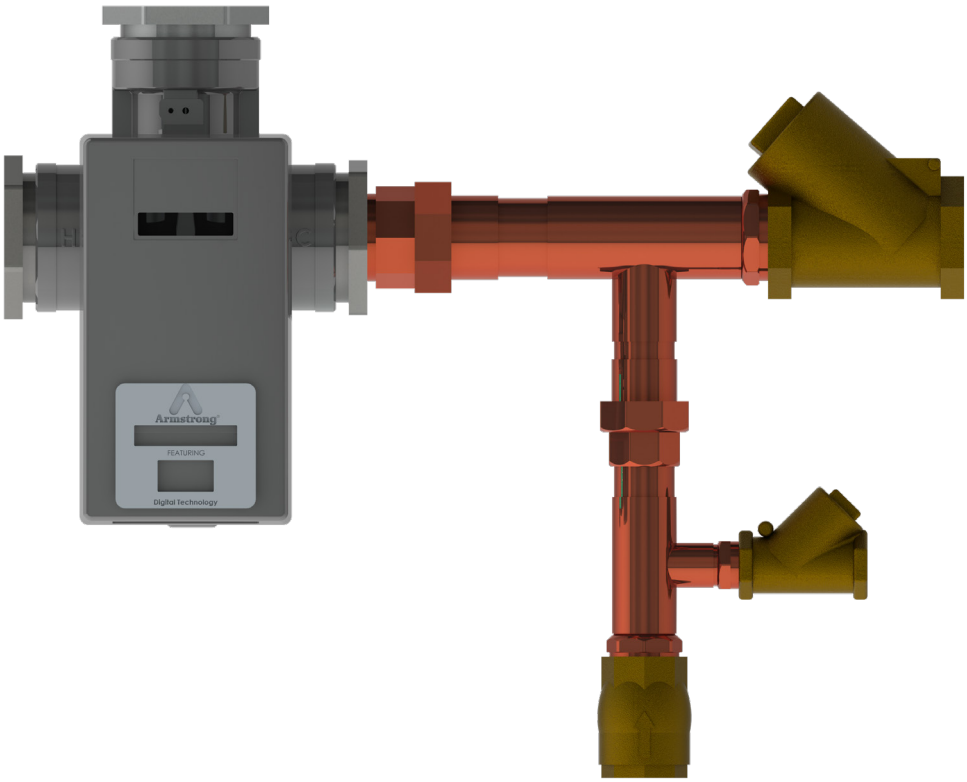

The Brain® Model DRV50R

DRV50R Performance Chart: Pressure Drop (in PSIG) to Flow Rate (in GPM)							
DRV50	Pressure Drop (PSIG)				Minimum System Draw-Off	Minimum Flow Rate	C_v
	5	10	15	20			
GPM	94	133	163	188	0 GPM	10 GPM	42

DRV50R Performance Chart: Pressure Drop (in BARG) to Flow Rate (in LPM)							
DRV50	Pressure Drop (BARG)				Minimum System Draw-Off	Minimum Flow Rate	K_v
	0.3	0.7	1.0	1.4			
LPM	355.8	503.5	617	711.1	0 LPM	38 LPM	36.33

Designs, materials, weights, and performance ratings are approximate and subject to change without notice. Visit **armstrong**international.com for the most up-to-date information.

Armstrong

THE BRAIN® MODEL DRV50R

TECHNICAL SPECIFICATIONS

General		
Protection	NEMA 3S, IPX4	
Ambient Temperature	Minimum Ambient Temperature: 35°F (2°C)	Maximum Ambient Temperature: 122°F (50°C)
Ambient Humidity	95% Non-Condensing	
Installation Environment	Suitable for indoor use only	
Materials	Valve: Stainless Steel, Electronics Module: PC / ABS	
Safety	Seven fail-safe cold triggers supported by integral self-diagnostics and a programmable over-temp limit	
Connections		
Inlet and Outlet Connections	2” NPT Female Connections	
Pressures		
Inlet Supply Pressures	Max. Pressure (DRV): 200 psi / 1379 kPA = 13.8 bar	Minimum Pressure: 20 psi / 138 kPA = 1.5 bar
	Max. Pressure (Manifold): 150 psi / 1034 kPA = 10.3 bar	
Supply Pressure Differential	Nominally equal	
Temperatures		
Hot Water Supply Temperature	Maximum Inlet Hot Supply Temperature: 185°F (85°C)	Minimum Inlet Hot Supply Temperature: 5°F (2°C) above DRV set point
Cold Water Supply Temperature	Minimum Inlet Cold Supply Temperature: 35.6°F (2°C)	
Min. Recirculation Temperature Loss	1°F (≤ 1°C)	
Min. Continuous Recirculation Flow	10 GPM (38 LPM)	
Recirculation Circuit		
Minimum Distance to First Outlet	25 ft (7.6 m)	
Electrical		
Power Supply	120 - 240V AC - 50/60 Hz	
Supply Fuse / Circuit Breaker	Grounding required (Switched Type 3 Amp - no plug; 15 Amp Grounding-type receptacle - plug)	
Battery	Qty (2) CR - P2 6V	
Configurable Settings		
Set Point Range	81°F to 158°F (27°C to 70°C)	
High Temperature Alert	Minimum of 2°F (1°C) above DRV set point	
High Temperature Error	5°F (2°C) above DRV set point	
Thermal Disinfection Temperature	Programmable range of 158°F to 185°F (70°C to 85°C)	
Thermal Disinfection Set-Up	Disinfection Duration: ≤ 100 minutes	Disinfection Cool Down Duration: ≤ 30 hours
Units of Measure	Degrees Fahrenheit (°F) or Degrees Celsius (°C)	
Connectivity		
Bluetooth®	On board with SAGE® mobile application (available in the Apple App Store and Google Play)	
BACnet MSTP	On board for connection to building automation system (BAS) operating on BACnet MSTP protocol	
Modbus RTU	RS-485 port for connection to building automation systems (BAS) operating on Modbus RTU protocol	
SAGE® Module	RS-485 port for connection to SAGE® module with Modbus TCP, BACnet TCP/IP, BACnet MSTP, or LonWorks protocessor *Note: Protocessors for other BAS protocols may be available upon request*	
SAGE® Subscription	Real-time monitoring, recording, and documentation dashboard for Armstrong Hot Water Systems	
Standards and Approvals		
ASSE 1017	Certified & Listed	
CSA B125.3-11	Compliant	
UL	Listed	
CE	Listed	

Designs, materials, weights, and performance ratings are approximate and subject to change without notice. Visit **armstrong**international.com for the most up-to-date information.

Armstrong®

THE BRAIN® MODEL DRV50R

WRITTEN SPECIFICATIONS

Category: The Brain®

Type: Digital Recirculation Valve

Model: Model DRV50R

Part 1 - GENERAL

1.0 Digital Recirculation Valve

1.1 DRV shall have four thermistors integral of the mixing valve body that measure the cold water and recirculation return inlet, hot water inlet, mixed water outlet, and over-temp safety measures.

1.2 DRV mixing valve body shall be of 316L stainless steel, mixing valve proportioner of 316L stainless steel, and a NEMA 3S electronics enclosure.

1.3 DRV50 shall have 2” inlet and outlet connections that will deliver 133 gpm @ 10 psid.

1.4 DRV shall be capable of + / - 2°F control during high, low, or extended periods of zero demand on the system, with a continuous recirculation of >10 gpm. Temperature control shall be achieved without aquastat-like control of the recirculation pump.

1.5 DRV setpoint shall be configured by the factory to customer specification. DRV shall be field adjustable.

1.6 DRV shall be provided pre-piped with a recirculation manifold.

2.0 DRV50 shall have the following operational specifications:

2.1 + / - 2°F (1°C) water temperature control

2.2 1°F minimum mixed water outlet to recirculated return inlet differential (system temperature loss)

2.3 Minimum continuous recirculation of 10 gpm

2.4 Automatic shutoff of hot water upon cold water inlet supply failure

2.5 Automatic shutoff of hot water flow in the event of a power failure

2.6 Programmable setpoint range of 81°F - 158°F (27°C - 70°C)

2.7 Programmable thermal disinfection mode

2.8 Programmable 1st level hi/lo temperature alert display

2.9 Programmable temperature error level for safety shutdown

3.0 DRV50 shall have the following connectivity specifications:

3.1 Bluetooth® on-board with SAGE® mobile application (Apple App Store and Google Play)

3.2 BACnet MSTP on-board for connection to building automation system (BAS) operating on BACnet MSTP protocol

3.3 Modbus RS-485 port for connection to building automation system (BAS) operating on Modbus RTU protocol

3.4 RS-485 port for connection to SAGE® module with Modbus TCP, BACnet TCP/IP, BACnet MSTP, or LonWorks protocessor
Note: Protocessors for other BAS protocols available upon request

4.0 DRV shall be certified to ASSE 1017, UL listed, and conform to CSA B125.

5.0 Warranty

5.1 DRV shall have a 5-year warranty on all components, with the exception of batteries and O-rings.

5.2 Pre-piped DMC components shall have a 2-year warranty from date of installation, but not longer than 27 months from date of shipment.

Designs, materials, weights, and performance ratings are approximate and subject to change without notice. Visit **armstrong**international.com for the most up-to-date information.

Armstrong®

THE BRAIN® MODEL DRV50R

CONNECTIVITY

The Brain® and SAGE®

SAGE® works seamlessly with The Brain® as it analyzes data to track behavior and performance as an integral component of a hot water system operation protocol which complies with a standard of care.

The Brain® and every derivative assembly is supplied with an integral RS-485 serial port. This port provides a direct connection to Building Automation Systems that operate on a **Modbus RTU** or **BACnet MSTP** protocol.

The RS-485 port is also deployed for direct connection to an optionally supplied Building System (BS) Module.

SAGE® Options

SAGE® for Building Automation Systems (BAS) – BS Module available with BAS specific ProtoCessor cards for connection to systems which operate on **Modbus TCP**, **BACnet™ TCP/IP**, **BACnet™ MSTP**, or **LonWorks™** protocols.

SAGE® for Mobile Connectivity - Featuring smart hot water system dashboard monitoring, secure remote programming, multi-location view, temperature and system diagnostic alerts, with unlimited digital documentation and automated report generation.

Mobile connectivity may be enabled by a customer activated no-term subscription.

Optional Building System (BS) Module

Adding a suffix "BS" to The Brain® DRV (example: DRV25BS) will automatically add SAGE®, the supplemental hardware and software required to maximize the connectivity features of Armstrong digital technology.

Designs, materials, weights, and performance ratings are approximate and subject to change without notice. Visit **armstrong**international.com for the most up-to-date information.

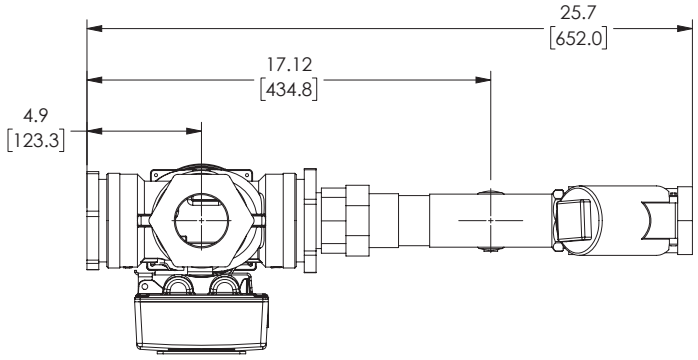

APPROVAL

BY:_____ DATE:_____

☐ APPROVED, PROCEED WITH FABRICATION

☐ APPROVED AS NOTED, PROCEED WITH FABRICATION IN ACCORDANCE WITH COMMENTS

☐ DISAPPROVED, DO NOT FABRICATE

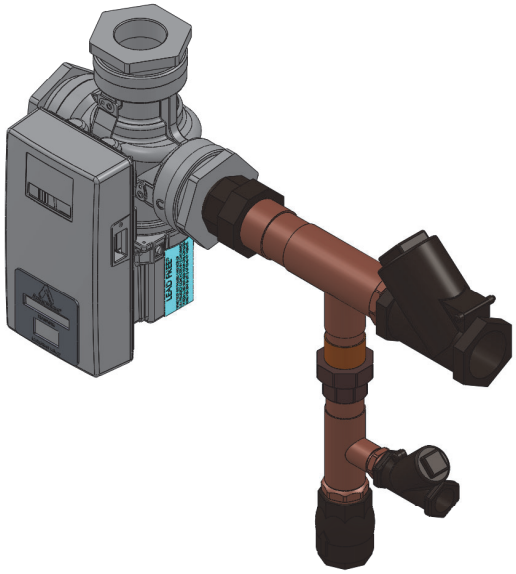

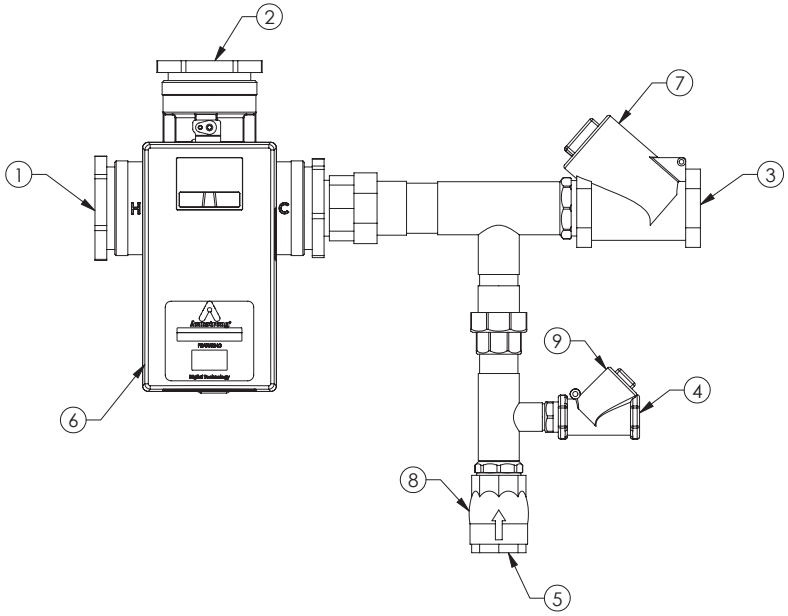

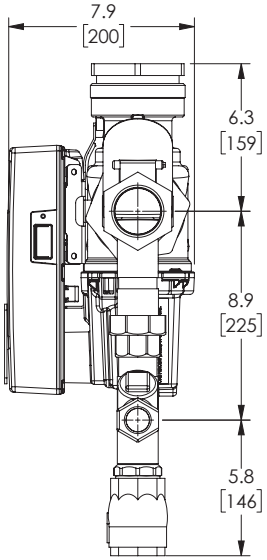

PROJECT NAME :

TAG :

ITEM NO.	DESCRIPTION	QTY	CONNECTION
1	HOT WATER INLET	1	2" NPT
2	MIXED WATER OUTLET	1	2" NPT
3	COLD WATER INLET	1	2" NPT
4	RETURN TO HEATER	1	1" NPT
5	RECIRC RETURN INLET	1	1-1/2" NPT
6	DRV50	1	2" NPT
7	SWING CHECK VALVE	1	2" NPT
8	SPRING CHECK VALVE	1	1-1/2" NPT
9	SWING CHECK VALVE	1	1" NPT

ITEM	MATERIAL
PIPING	COPPER TYPE "L"

NOTE(S):

1. ARMSTRONG PART NUMBER : D40813
2. ALL VALVES AND FITTINGS IN THIS ASSEMBLY CONTAIN LESS THAN 0.25% LEAD BY WEIGHTED AVERAGE.

DO NOT SCALE DRAWING
TOLERANCES UNLESS OTHERWISE SPECIFIED
DIMENSIONING ENGLISH [mm]

FRACTIONAL ± 1/64
ANGULAR: ± 2

		IN.	MM
DECIMAL	.XXXX ±	.0005	-----
	.XXX ±	.005	.010
	.XX ±	.015	.10
	.X	---------	.3

Armstrong

	NAME	DATE
DRAWN	Jega Theesan	04/09/2015
RELEASED		

ARMSTRONG INTERNATIONAL

Copyright © 2010 ARMSTRONG INTERNATIONAL, INC.

DRV50R 2 NPT 2 NPT 1-1/2 NPT CPR

MATERIAL CN59632 | REV E | DWG. SALES | SHEET 1 OF 1