THE BRAIN® MODEL DMC40BS FLEX

DIGITAL MIXING CENTER FLEX with SAGE®

The Digital Mixing Center (DMC) is designed to be the primary water temperature controller in a recirculating hot water system. DMC40BS Flex features a digital recirculation valve (The Brain®).

Engineered exclusively for continuously recirculated hot water systems, DMC40BS Flex improves system performance and safety by delivering a consistent preset temperature to the points of use.

Innovative digital technology resists “temperature creep” during periods of zero system demand which eliminates the requirement for manual throttling valves, supplementary RTD or a temperature actuated switch to control the pump.

Energy efficient, low temperature loss systems can be implemented by the ability of DMC40BS Flex to operate with a system return differential of just 1° F below set point.

User safety and overall system health is maintained by a series of programmable temperature alerts, onboard operational self-diagnostics, and a thermal disinfection option.

DMC40BS Flex is a complete pre-piped assembly inclusive of isolation valves, check valves, strainers, thermometers, and pressure gauges, and is provided with five connection points for simplified installation.

SAGE® (BS) is performance software that monitors, records, and documents data as a critical component of a Water Safety Management Plan.

SAGE® works seamlessly with several building automation system protocols, or users can purchase a subscription to use SAGE® on a mobile device.

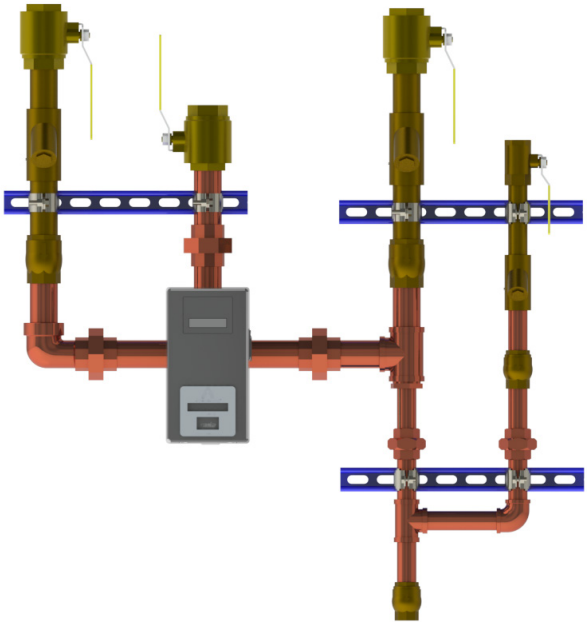

The Brain® Digital Mixing Center DMC40BS Flex

DMC40BS Flex Performance Chart: Pressure Drop (in PSIG) to Flow Rate (in GPM)							
DRV40	Pressure Drop (PSIG)				Minimum System Draw-Off	Minimum Flow Rate	C_v
	5	10	15	20			
GPM	48	70	85	98	0 GPM	5 GPM	22

DMC40BS Flex Performance Chart: Pressure Drop (in BARG) to Flow Rate (in LPM)							
DRV40	Pressure Drop (BARG)				Minimum System Draw-Off	Minimum Flow Rate	K_v
	0.3	0.7	1.0	1.4			
LPM	181.7	265	321	371	0 LPM	19 LPM	19

Designs, materials, weights, and performance ratings are approximate and subject to change without notice. Visit **armstrong**international.com for the most up-to-date information.

Armstrong

THE BRAIN® MODEL DMC40BS FLEX

TECHNICAL SPECIFICATIONS

General		
Protection	NEMA 3S, IPX4	
Ambient Temperature	Minimum Ambient Temperature: 35°F (2°C)	Maximum Ambient Temperature: 122°F (50°C)
Ambient Humidity	95% Non-Condensing	
Installation Environment	Suitable for indoor use only	
Materials	Valve: Stainless Steel, Electronics Module: PC / ABS	
Safety	Seven fail-safe cold triggers supported by integral self-diagnostics and a programmable over-temp limit	
Connections		
DRV Connections	1-1/2” NPT	
Hot & Cold Water Inlet Connections	1-1/2” NPT	
Mixed Water Outlet Connections	1-1/2” NPT	
Recirc. Mixed Return Connection	1” NPT	
Return to Heater Connection	1” NPT	
Pressures		
Inlet Supply Pressures	Max. Pressure (DRV): 200 psi / 1379 kPA = 13.8 bar	Minimum Pressure: 20 psi / 138 kPA = 1.5 bar
	Max. Pressure (Manifold): 150 psi / 1034 kPA = 10.3 bar	
Supply Pressure Differential	Nominally equal	
Temperatures		
Hot Water Supply Temperature	Maximum Inlet Hot Supply Temperature: 185°F (85°C)	Minimum Inlet Hot Supply Temperature: 5°F (2°C) above DRV set point
Cold Water Supply Temperature	Minimum Inlet Cold Supply Temperature: 35.6°F (2°C)	
Min. Recirculation Temperature Loss	1°F (≤ 1°C)	
Min. Continuous Recirculation Flow	5 GPM (19 LPM)	
Recirculation Circuit		
Minimum Distance to First Outlet	25 ft (7.6 m)	
Electrical		
Power Supply	120 - 240V AC - 50/60 Hz	
Supply Fuse / Circuit Breaker	Grounding required (Switched Type 3 Amp - no plug; 15 Amp Grounding-type receptacle - plug)	
Battery	Qty (2) CR - P2 6V	
Configurable Settings		
Set Point Range	81°F to 158°F (27°C to 70°C)	
High Temperature Alert	Minimum of 2°F (1°C) above DRV set point	
High Temperature Error	5°F (2°C) above DRV set point	
Thermal Disinfection Temperature	Programmable range of 158°F to 185°F (70°C to 85°C)	
Thermal Disinfection Set-Up	Disinfection Duration: ≤ 100 minutes	Disinfection Cool Down Duration: ≤ 30 hours
Units of Measure	Degrees Fahrenheit (°F) or Degrees Celsius (°C)	

Continued on next page

Designs, materials, weights, and performance ratings are approximate and subject to change without notice. Visit **armstrong**international.com for the most up-to-date information.

Armstrong

THE BRAIN® MODEL DMC40BS FLEX

TECHNICAL SPECIFICATIONS

Connectivity	
Modbus RTU	RS-485 port for connection to building automation systems (BAS) operating on Modbus RTU protocol
SAGE® Module	RS-485 port for connection to SAGE® module with Modbus TCP, BACnet TCP/IP, BACnet MSTP, or LonWorks protocessor *Note: Protocessors for other BAS protocols may be available upon request*
SAGE® Subscription	Real-time monitoring, recording, and documentation dashboard for Armstrong Hot Water Systems
Standards and Approvals	
ASSE 1017	Certified & Listed
CSA B125.3-11	Compliant
UL	Listed
CE	Listed

Designs, materials, weights, and performance ratings are approximate and subject to change without notice. Visit **armstrong**international.com for the most up-to-date information.

THE BRAIN® MODEL DMC40BS FLEX

WRITTEN SPECIFICATIONS

Category: The Brain®

Type: Digital Mixing Center

Model: Model DMC40BS Flex

Part 1 - GENERAL

1.0 Digital Mixing Center

1.1 One (1) Digital Recirculation Valve (DRV) shall be supplied pre-piped and pressure-tested as a lead-free Digital Mixing Center (DMC) complete with hot water inlet, cold water inlet, mixed water outlet, recirculation return inlet, and return to heater connections.

1.2 DMC40BS Flex shall comprise of (1) DRV40 supplied with isolation valves, strainers, and check valves securely mounted on carbon steel unistruts with industrial-grade enamel paint.

2.0 Digital Recirculation Valve

2.1 DRV shall have four thermistors integral of the mixing valve body that measure the cold water and recirculation return inlet, hot water inlet, mixed water outlet, and over-temp safety measures.

2.2 DRV mixing valve body shall be of 316L stainless steel, mixing valve proportioner of 316L stainless steel, and a NEMA 3S electronics enclosure.

2.3 DRV40 shall have 1-1/2” inlet and outlet connections that will deliver 70 gpm @ 10 psid.

2.4 DRV shall be capable of + / - 2°F control during high, low, or extended periods of zero demand on the system, with a continuous recirculation of >5 gpm. Temperature control shall be achieved without aquastat-like control of the recirculation pump.

2.5 DRV setpoint shall be configured by the factory to customer specification. DRV shall be field adjustable.

3.0 DRV40 shall have the following operational specifications:

3.1 + / - 2°F (1°C) water temperature control

3.2 1° F minimum mixed water outlet to recirculated return inlet differential (system temperature loss)

3.3 Minimum continuous recirculation of 5 gpm

3.4 Automatic shutoff of hot water upon cold water inlet supply failure

3.5 Automatic shutoff of hot water flow in the event of a power failure

3.6 Programmable setpoint range of 81°F - 158°F (27°C - 70°C)

3.7 Programmable thermal disinfection mode

3.8 Programmable 1st level hi/lo temperature alert display

3.9 Programmable temperature error level for safety shutdown

4.0 DRV40 shall have the following connectivity specifications:

4.1 Modbus RS-485 port for connection to building automation system (BAS) operating on Modbus RTU protocol

4.2 RS-485 port for connection to SAGE® module with Modbus TCP, BACnet TCP/IP, BACnet MSTP, or LonWorks protocessor
Note: Protocessors for other BAS protocols available upon request

4.3 SAGE® Building Systems (BS) Module

4.4 SAGE® subscription real-time monitoring, recording, and documentation dashboard for Armstrong Hot Water systems

5.0 DRV shall be certified to ASSE 1017, UL listed, and conform to CSA B125.

6.0 Warranty

6.1 DRV shall have a 5-year warranty on all components, with the exception of batteries and O-rings.

6.2 Pre-piped DMC components shall have a 2-year warranty from date of installation, but not longer than 27 months from date of shipment.

Designs, materials, weights, and performance ratings are approximate and subject to change without notice. Visit **armstrong**international.com for the most up-to-date information.

Armstrong®

THE BRAIN® MODEL DMC40BS FLEX

CONNECTIVITY

The Brain® and SAGE®

SAGE® works seamlessly with The Brain® as it analyzes data to track behavior and performance as an integral component of a hot water system operation protocol which complies with a standard of care.

The Brain® and every derivative assembly is supplied with an integral RS-485 serial port. This port provides a direct connection to Building Automation Systems that operate on a **Modbus RTU** protocol.

The RS-485 port is also deployed for direct connection to an optionally supplied Building System (BS) Module.

SAGE® Options

SAGE® for Building Automation Systems (BAS) – BS Module available with BAS specific ProtoCessor cards for connection to systems which operate on **Modbus TCP**, **BACnet™ TCP/IP**, **BACnet™ MSTP**, or **LonWorks™** protocols.

SAGE® for Mobile Connectivity - Featuring smart hot water system dashboard monitoring, secure remote programming, multi-location view, temperature and system diagnostic alerts, with unlimited digital documentation and automated report generation.

Mobile connectivity may be enabled by a customer activated no-term subscription.

Optional Building System (BS) Module

Adding a suffix “BS” to The Brain® DRV (example: DRV25BS) will automatically add SAGE®, the supplemental hardware and software required to maximize the connectivity features of Armstrong digital technology.

Designs, materials, weights, and performance ratings are approximate and subject to change without notice. Visit **armstrong**international.com for the most up-to-date information.

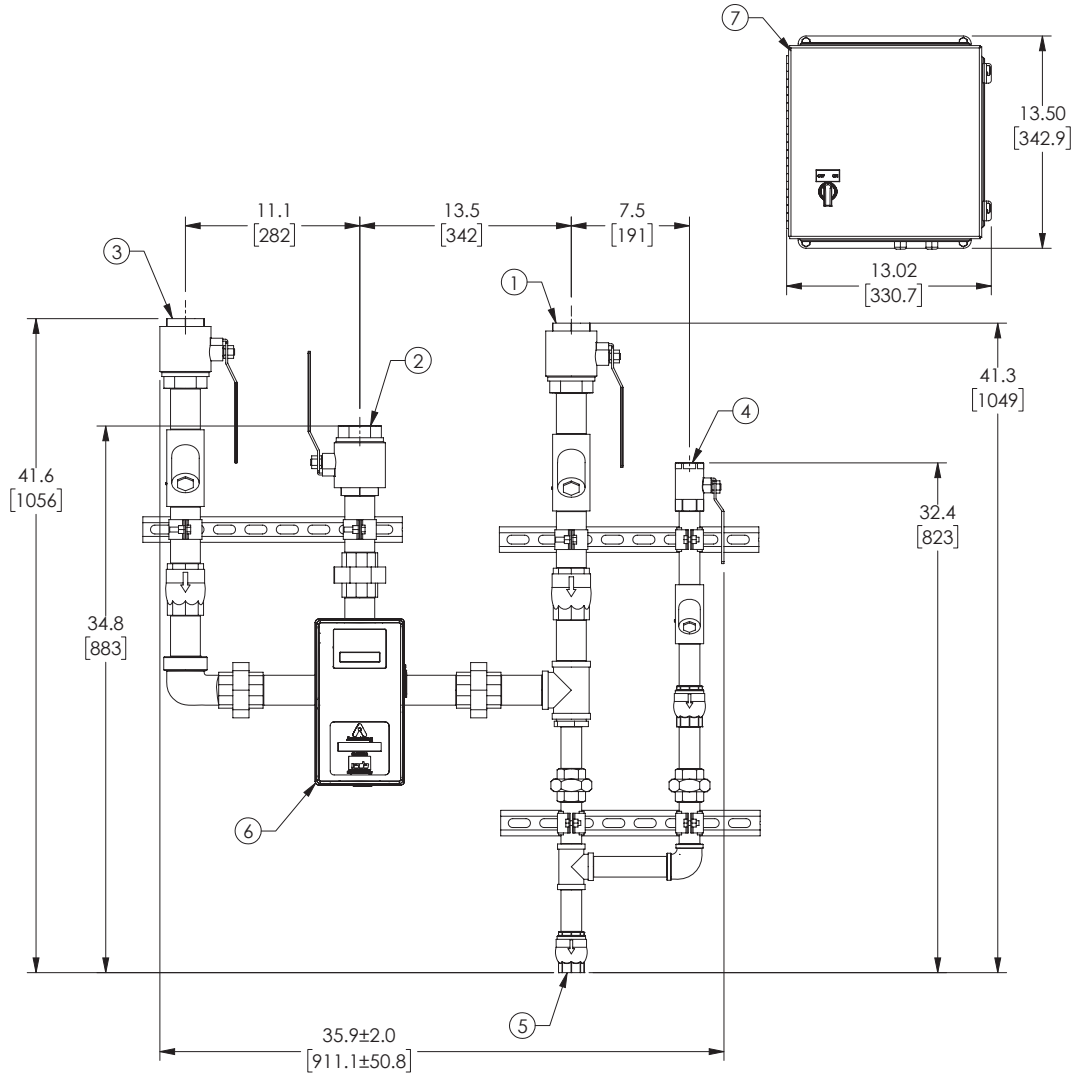

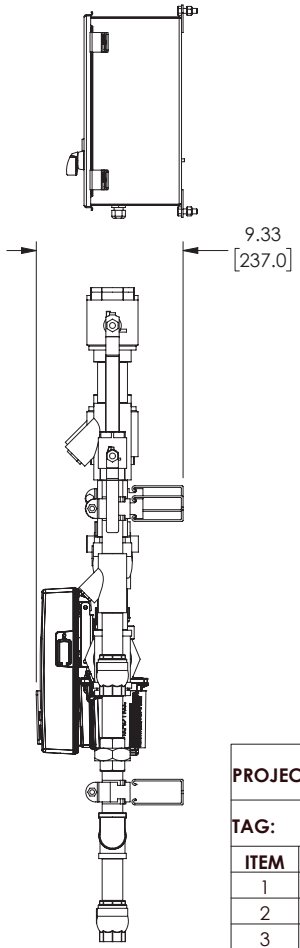

APPROVAL

BY:_____ DATE:_____

- ☐ APPROVED, PROCEED WITH FABRICATION
- ☐ APPROVED AS NOTED, PROCEED WITH FABRICATION IN ACCORDANCE WITH COMMENTS
- ☐ DISAPPROVED, DO NOT FABRICATE

PROJECT DESCRIPTION:

TAG:

ITEM	DESCRIPTION	CONNECTION
1	COLD WATER INLET	1-1/2" NPT
2	MIXED WATER OUTLET	1-1/2" NPT
3	HOT WATER INLET	1-1/2" NPT
4	RECIRC RETURN INLET	1" NPT
5	RETURN TO HEATER	1" NPT
6	DRV40	1-1/2" NPT
7	ELECTRICAL PANEL	110VAC @ 1.2A
	ITEM	
	PIPING	COPPER TYPE "L"

NOTES:

1. ARMSTRONG PART NUMBER: D86391
2. ALL DIMENSIONS +/-1 [25] UNLESS OTHERWISE SHOWN
3. COPMPLETE ASSEMBLY LEAD FREE COMPLIANT - THE WETTED SURFACE OF THIS PRODUCT CONTACTED BY CONSUMABLE WATER CONTAINS LESS THAN ONE QUARTER OF ONE PERCENT (0.25%) OF LEAD BY WEIGHT
4. PACKAGE INCLUDES ALL REQUIRED INLET CHECK VALVES AND STRAINERS ON DOMESTIC SIDE

DO NOT SCALE DRAWING
TOLERANCES UNLESS OTHERWISE SPECIFIED
DIMENSIONING ENGLISH [mm]

FRACTIONAL ± 1/64
ANGULAR: ± 2

		IN.	MM
DECIMAL	.XXXX ±	.0005	-----
	.XXX ±	.005	.010
	.XX ±	.015	.10
	.X	---------	.3

	NAME	DATE
DRAWN	Lucas Wilkins	07/27/2016
RELEASED		

ARMSTRONG INTERNATIONAL

Copyright © 2010 ARMSTRONG INTERNATIONAL, INC.

DMC40BS FLEX 1-1/2 NPT 1-1/2 NPT 1 NPT

MATERIAL: CN52129 | REV. A | DWG. SALES | SHEET 1 OF 1