AIM® Models: AD5000 and ST5700 Armstrong Intelligent Monitoring Installation Manual

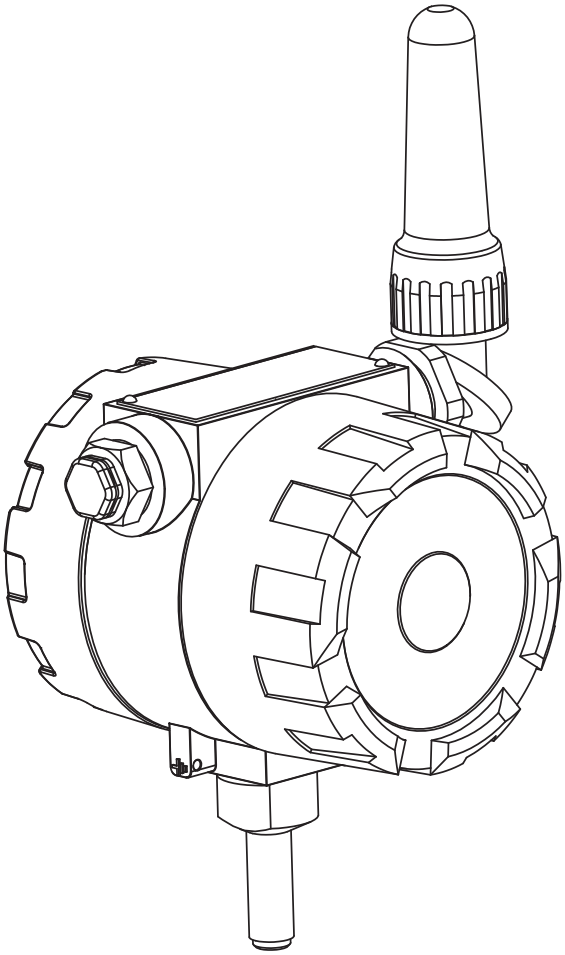

AIM™
ARMSTRONG INTELLIGENT MONITORING

256-EN V3.4

Please read and save these instructions

Armstrong®

Safety

Icon Legend:

— DANGER! … Injury or death and property damage are *imminent*

— WARNING! … Injury or death and property damage are *possible*

— CAUTION! … Potential property damage, expensive repairs, and/or voiding the equipment warranty *may result*

BURN HAZARD! Direct exposure to steam, hot water, or hot metal surfaces can cause severe skin burns. Skin contact with 140°F (60°C) water or metal for only five (5) seconds may cause a second-degree burn.

Failure to comply with instructions following a safety icon may result in adverse consequences including, property damage, personal injury, or, in extreme cases, death.

General Safety Guidelines:

1. Inappropriate use of this product (beyond typical, intended use) could cause damage to the product and other property. It may also result in personal injury or, in extreme cases, death.
2. Only designated, qualified, and competent personnel should conduct installation, maintenance, and service in accordance with the directions in this product instruction manual.
3. Installation shall comply with all applicable federal, state, and local, electrical and construction, regulatory codes.
4. Improper installation, start-up, operation, maintenance, or service may void the product warranty.
5. When installing, commissioning or servicing this product:
   a. ALWAYS select and wear appropriate personal protective equipment (PPE) before carrying out any physical work at the job site. Appropriate PPE may include hard hats, safety glasses, gloves, boots or shoes w/ non-slip soles and toe guards, and protective overalls.
   b. ALWAYS scan the work area and take note of potential hazards before entering. Adjust your travel path or work position to avoid hazards and personal injury.
   c. ALWAYS observe designated safety procedures when working in hazardous locations (areas containing explosive and combustible gases, vapors, and dusts) and confined spaces (locations where the breathable air supply may be limited or variable or where entrapment could occur).
   d. ALWAYS use appropriate lockout-tagout procedures to disconnect power sources and de-energize machinery before conducting installation, service, and repair.
   e. ALWAYS use great care and appropriate safety gear when working above ground level, especially on ladders and platforms or in the presence of overhead, electrical power lines.
   f. ALWAYS ensure that all “live” steam, water supply, and condensate return lines are isolated before breaking or loosening any plumbing joints.
   g. ALWAYS carefully relieve any residual internal pressure in the system or connecting pipe work before breaking or loosening any plumbing joints.
   h. ALWAYS allow hot parts to cool before commencing work to avoid the risk of skin burns.

Warnings and Cautions

WARNING: EXPLOSION AND FIRE HAZARDS MAY EXIST

Please review transmitter design certifications (refer to page 10 of this manual) against application conditions and requirements BEFORE installing a transmitter in a hazardous location (an environment that has combustible or explosive substances). Crucial factors to consider are the types of combustibles in the environment (gas, vapor, and dust) and frequency of exposure to them (continuous, probable on occasion, or infrequent). ALWAYS install the transmitter according to these instructions and all applicable local, national, and international standards, codes, and practices.

WARNING: SPARK IGNITION MAY OCCUR

The outside surface of the transmitter enclosure and antenna may develop an electrostatic charge over time. If the charge is great enough, in certain hazardous locations, a spark discharge could create an explosion or fire. BEFORE servicing the transmitter, to reduce or neutralize the electrostatic charge, remove dust and debris by wiping down the exterior of the enclosure and the antenna with a clean cloth dampened with water and a mild detergent ONLY. DO NOT use flammable cleaning agents.

WARNING: WORK SAFELY

ALWAYS use standard, industrial, safety protocol (refer to pp. B of this manual) when installing, removing, or performing authorized service procedures on Armstrong Intelligent Monitoring™ transmitters that are on, or near, process equipment. (Process equipment includes, at a minimum, steam traps, relief valves, hot pipes, related equipment.)

Caution: Lithium Batteries and Shipping

Armstrong Intelligent Monitoring™ products use lithium batteries as power source. Lithium batteries are regulated in transportation by the U.S. Department of Transportation and are also covered by IATA (International Air Transportation Association), ICAO (International Civil Aviation Organization), and ADR (2009 European agreement concerning International Carriage of Dangerous Goods). Confirm transmitters are packaged and shipped in accordance with all shipping regulations.

Caution: Damaged Transmitter

If the transmitter becomes damaged, immediately remove it from service. DO NOT attempt field repair or service. Contact Armstrong Smart Services Group at:

+12692731415
Armstrong International, Inc.
816 Maple St.
Three Rivers, MI 49093

Select Suitable Installation Locations

The end user assumes the responsibility for ensuring the transmitter installation location, in the process environment, is satisfactory and free of workplace hazards and destructive conditions (i.e. extreme weather events) that may damage the transmitter. This manual specifies acceptable installation conditions and mounting methods for process piping. Follow these guidelines to prevent transmitter damage, malfunction, and failure.

Notice: Compliance

This transmitter complies with electromagnetic emissions and immunity requirements. Operation is subject to the following condition:

- This transmitter may not cause harmful interference.
- This transmitter must accept any interference received, including interference that may cause undesired operations.

Notice: Usage

This manual should be used by experienced personnel as a guide to the installation of the Models AD5000 and ST5700 Armstrong Intelligent Monitoring™ System. Selection or installation of equipment should always be accompanied by competent technical assistance. You are encouraged to contact Armstrong International or its local sales representative for additional information.

Notice: Maintenance (Battery)

Authorized maintenance to the transmitter(s) is limited to replacing the battery and o-ring seals. All other maintenance should be performed only by Armstrong Smart Services Group. DO NOT attempt any other maintenance aside from changing the battery and contact Armstrong Smart Services Group for repair:

+12692731415
Armstrong International, Inc.
816 Maple St.
Three Rivers, MI 49093

Specific Conditions of Use

- When mounted without a heat sink directly above the pipe, the maximum process temperature allowed is 160°C.
- When mounted without a heat sink 45° above the horizontal to the pipe or below, the maximum process temperature allowed is 195°C.
- When mounted with a heat sink 45° above the horizontal to the pipe or below, the maximum process temperature allowed is 255°C.
- When mounted with a dual heat sink and extension 45° above the horizontal to the pipe or below, the maximum process temperature allowed is 440°C.

WARNING: POTENTIAL ELECTROSTATIC DISCHARGE
Clean product only with a damp cloth.

WARNING: ENCLOSURE CONTAINS ALUMINUM
Care must be taken to avoid hazard due to impact or friction.

WARNING: POTENTIAL EXPLOSION HAZARD WITH COMBUSTIBLE DUSTS
DO NOT open monitor when an explosive dust atmosphere is present. To service the monitor or access the internal HART modem port, remove the monitor to a non-hazardous location BEFORE opening the enclosure.

Table of Contents

*Wireless*HART Overview

*Wireless*HART is a simple, reliable, and secure industrial wireless communications protocol.

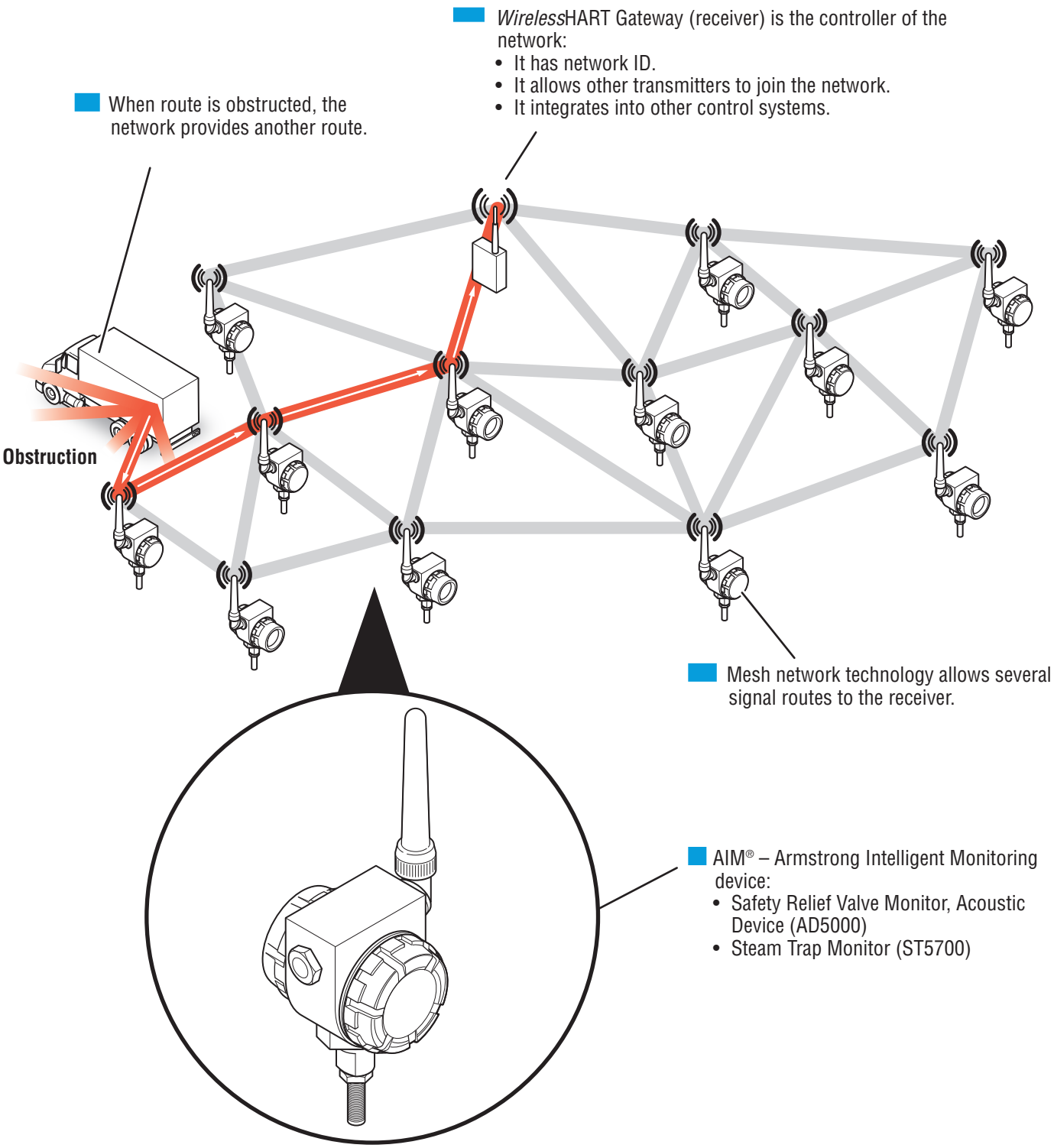

Designing a WirelessHART Network

WirelessHART Best Practices

- Obstructions affect transmission distance:

Level of Obstruction	Typical Transmission Distance feet (meters)
None (clear line of sight)	Up to 1000 ft. (300 m)
Light (few or scattered obstacles)	Up to 500 ft. (150 m)
Medium (a vehicle could pass between obstacles)	Up to 200 ft. (60 m)
Heavy (a person could walk between obstacles)	Up to 100 ft. (30 m)

- Each transmitter should have three neighbors minimum.

- 25% of the transmitters should report directly to *Wireless*HART Gateway.

  Note: Allowable minimum is 10% or five *Wireless*HART transmitters.

- Transmission rate affects network:
  - Higher/frequent transmission rates reduce the number of transmitters allowed on network
  - Higher transmission rates reduce battery life
  - Lower transmission rates reduce resolution

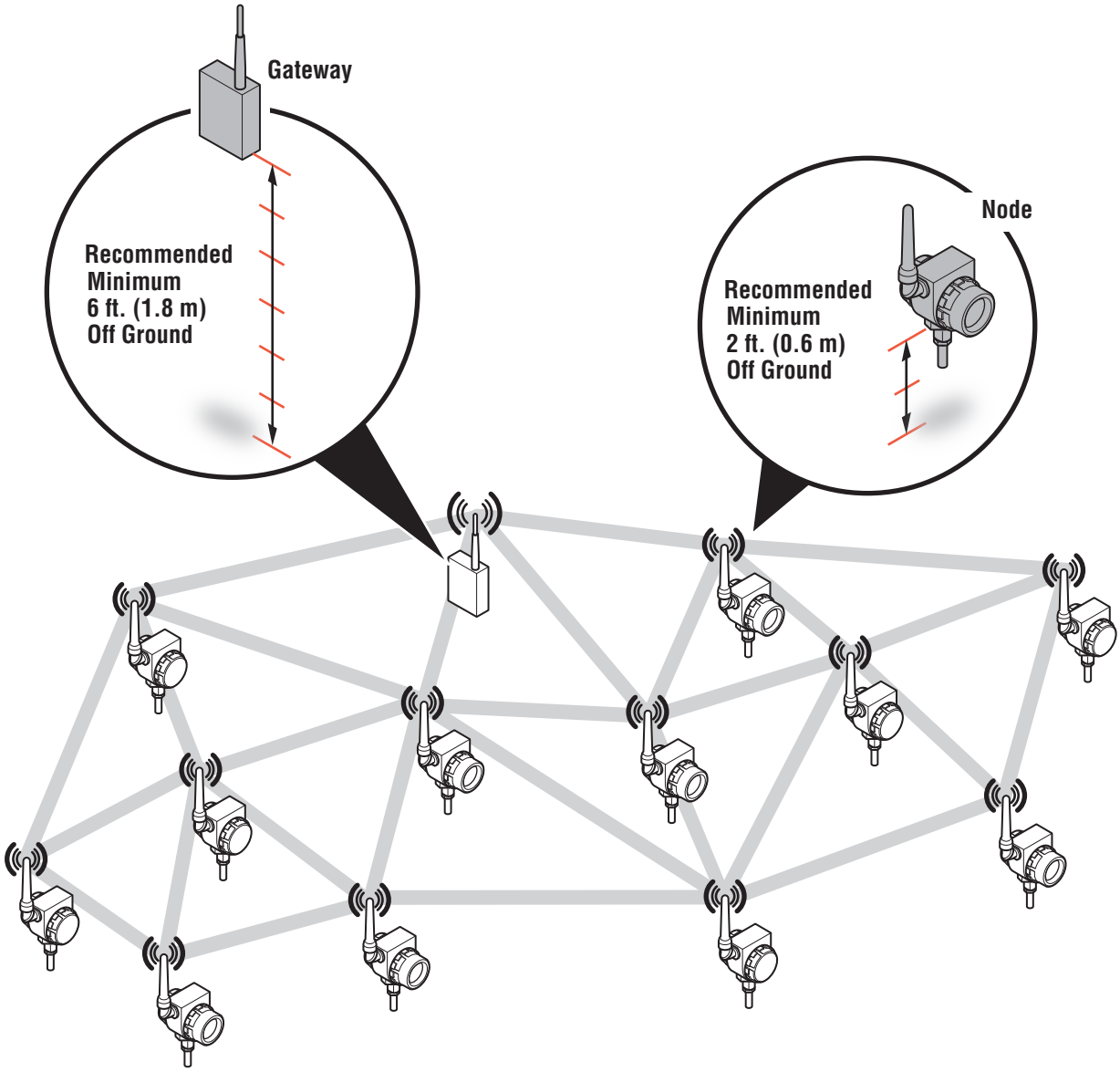

Installing Battery

Warning: Sparking Hazard
If replacing a battery in the field, especially in areas where explosive or potentially explosive atmospheres may exist, dampen a cloth with water and wipe down the exterior of the monitor enclosure and antenna. Removal of dust and debris helps to prevent static electricity discharge.

Recommendation: When initially installing or replacing batteries, first install or replace the battery in the monitor that is locate closest to the access point (or gateway, as the case may be). Then install or replace the battery in the next closest monitor to the access point. Continue this process of working outward from the access point. This battery replacement technique will help monitors in the system to learn the existence of network neighbors more quickly.

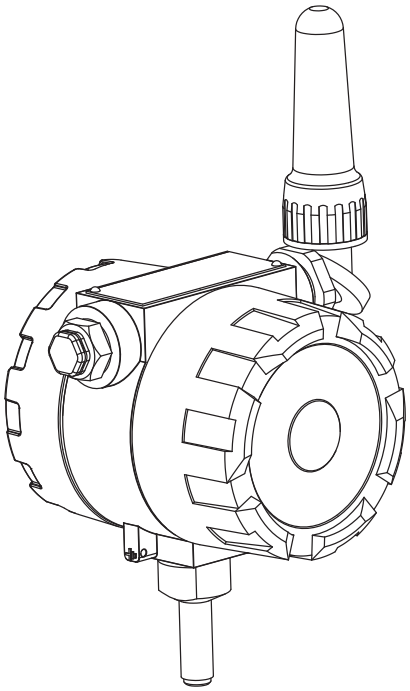

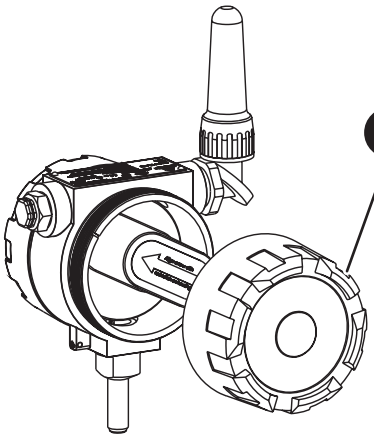

1. Remove tall housing cap.

2. Inspect O-ring:
   - Replace if worn or damaged.
   - Lubricate if necessary.

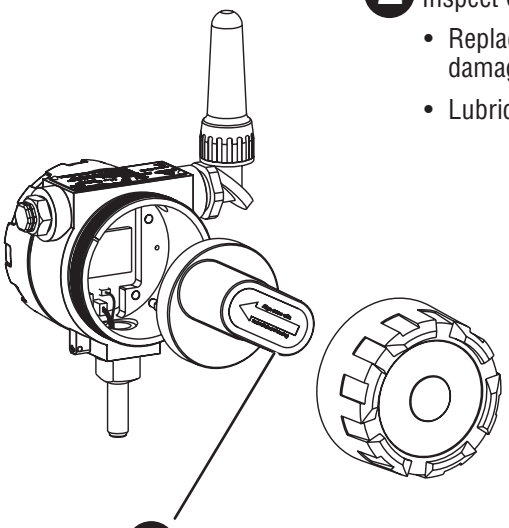

3. Orient red arrow on battery label to point towards red slot in enclosure. Insert battery pack into housing until it makes a firm connection with the housing,

   Note: Use only Armstrong Model D64519 lithium metal battery pack. Use care when installing battery not to damage or bend any components.

4. If the monitor is new or has been out of service for awhile, confirm that the sliding DIP switch, located on the main printed circuit board (PCB), is set in the "ON" position. (Note: The main PCB can only be viewed from the opposite side of the monitor w/ the short housing cap removed.)

5. Reinstall tall housing cap – tighten to 25 ft-lb (34 N-m) torque.

CAUTION!: Properly tighten cap to avoid water leakage into housing.

Rules and Regulations

This transmitter is designed for live maintenance in certain hazardous environments. All maintenance should be performed by experienced personnel in accordance with local, national, and international standards and codes.

Monitor Programming

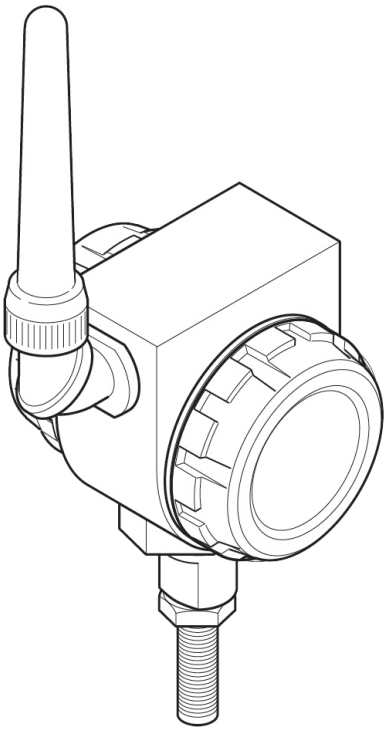

1 Remove front housing cap.

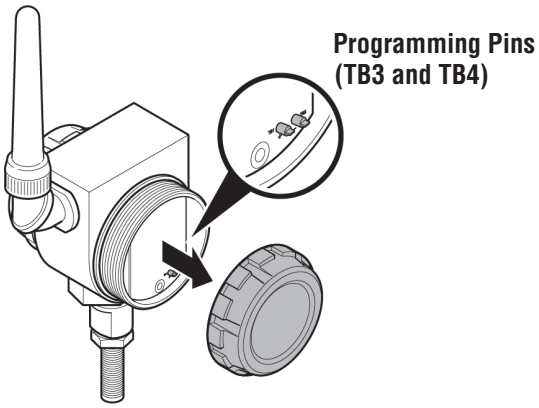

2 Use HART communicator to program the following:

- Transmitter ID
- Network ID
- Join key
- Temperature setting
- Temperature units
- HART tag

WARNING!: If programming in hazardous environment, confirm programming transmitter is classified for that location. See page 16 for acceptable intrinsic safety Entity Parameters. 16

HART Communicator Options

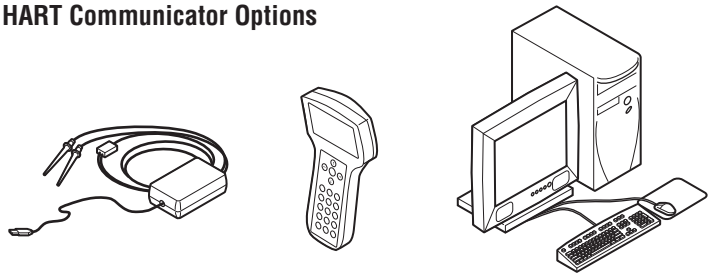

USB Modem | **Handheld Communicator** | **Software**

3 Reinstall front housing cap – torque 25 ft-lb (34 N-m).

CAUTION!: Properly tighten cap to avoid water leakage into housing.

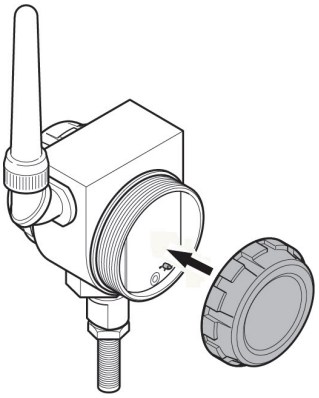

Installing Waveguide™ and Transmitter

Recommended Clearances

- Make sure Waveguide is oriented so that enough clearance is available to install transmitter.

  Note: Install antenna in vertical position for optimal radio performance.

⚠ **CAUTION!:** To prevent damage, do not rotate antenna more than 180 degrees.

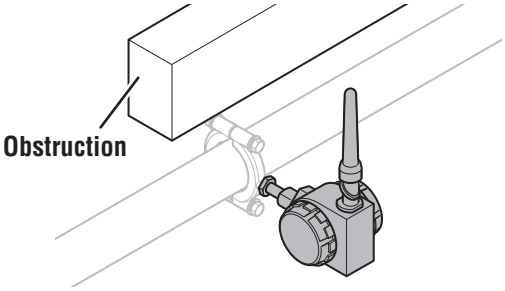

- **Recommendation:** Install transmitter at least 3 ft. (1 m) from any large structure for optimal radio performance.

⚠ **CAUTION!:** Install the transmitter so that hazards do not interfere with or damage the transmitter. Examples of physical hazards include, but are not limited to: blowing steam or condensate directly onto the transmitter, high temperature pipes, installation in pathways where the transmitter could be struck by personnel or vehicles, etc.

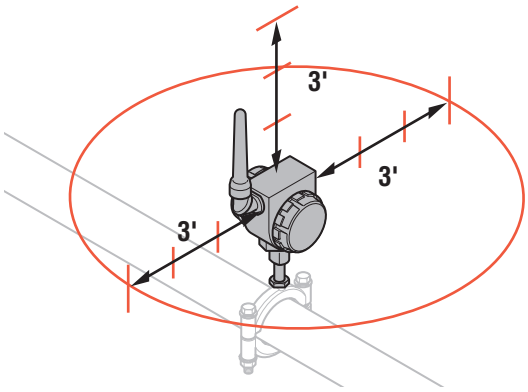

Proper Transmitter Positioning

Pipe (steam) application temperature determines the correct transmitter mounting configuration. The transmitter may have angular mounting restrictions on horizontally running pipe.

Note: There are no angular mounting restrictions on vertical piping.

Pipe Temperature	0-160ºC / 32-320ºF
Corresponding Saturated Steam Pressure	0.0061-6.2 bar(a) / 0.089-89.6 PSIA

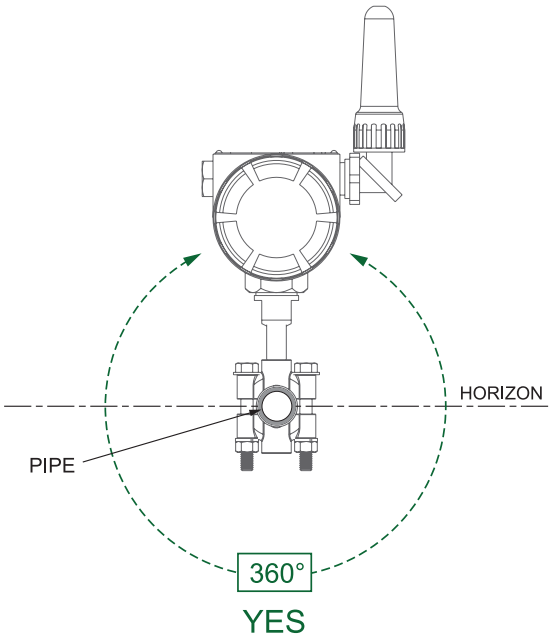

Pipe Temperature	160-195ºC / 320-383ºF
Corresponding Saturated Steam Pressure	6.2-14.0 bar(a) / 89.6-203 PSIA

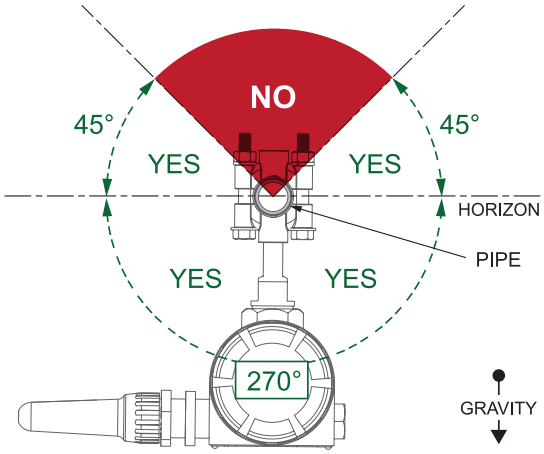

Pipe Temperature	195-255°C / 383-491°F
Corresponding Saturated Steam Pressure	14.0-43.2 bar(a) / 89.6-612 PSIA

Note: A single heat sink is required.

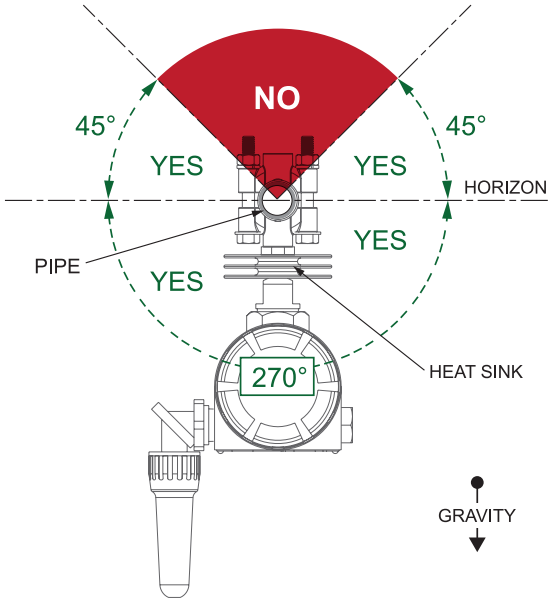

Pipe Temperature	255-440°C / 491-824°F
Corresponding Saturated Steam Pressure	43.2 bar(a) - * / 612 PSIA - *

*Steam is superheated at this temperature.

Note: Dual heat sinks and a stem extension are required.

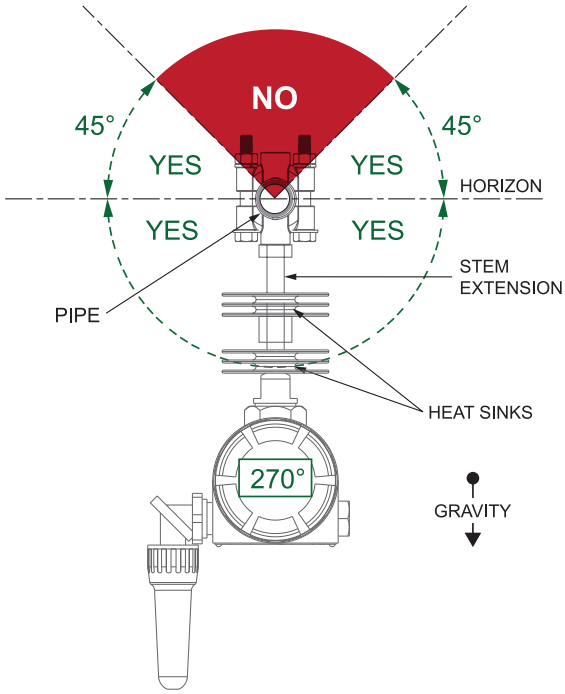

Mounting Transmitter to Piping

BURN HAZARD! Pipe and fittings may be hot. To avoid contact burns, shut off the steam flow to the installation point and allow piping to cool before installing the transmitter wave guide. Otherwise, use appropriate PPE and extreme care to help avoid serious burns.

1 Position Waveguide no greater than 6 in. (15 cm) from inlet of trap.

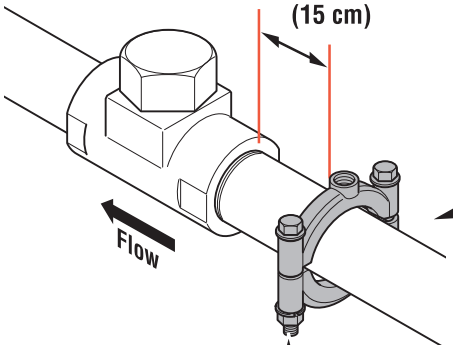

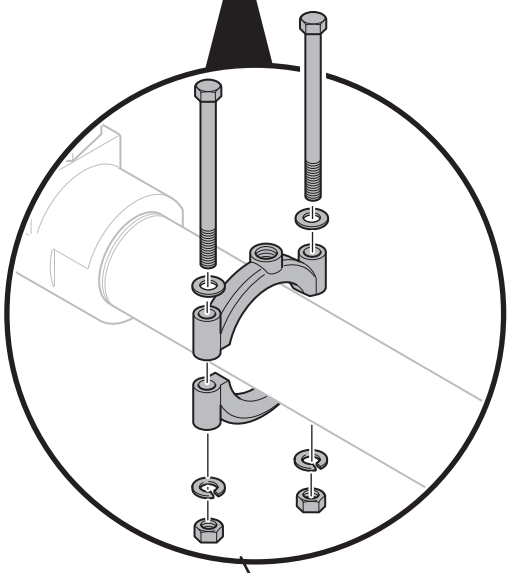

2 Install Waveguide:

- Assemble Waveguide around pipe.
- Torque Waveguide bolts:

  For 5/16 in - 18 size bolts, 11.5 ft-lb (15.6 N-m).

  For 3/8 in - 16 size bolts, 20.6 ft-lb (27.9 N-m).

3 Refer to page 6 to determine the proper installation orientation for pipe temperature/steam pressure. 6

Note: If heat sink is required, make sure cup side of heat sink faces monitor.

Note: Thread heat sink to the top.

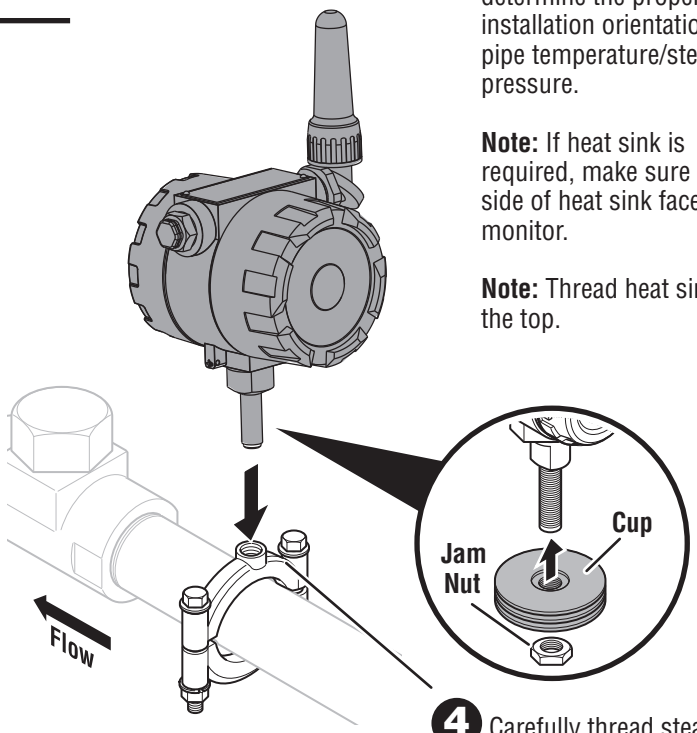

4 Carefully thread steam trap transmitter stem into Waveguide.

CAUTION!: Do not cross-thread stem.

5 Torque transmitter to 45 ft-lb (61 N-m).

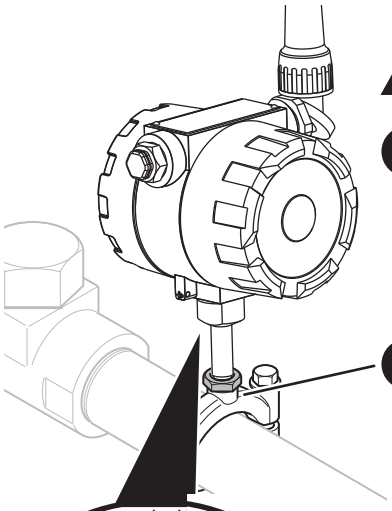

6 Tighten jam nut to 45 ft-lb (61 N-m).

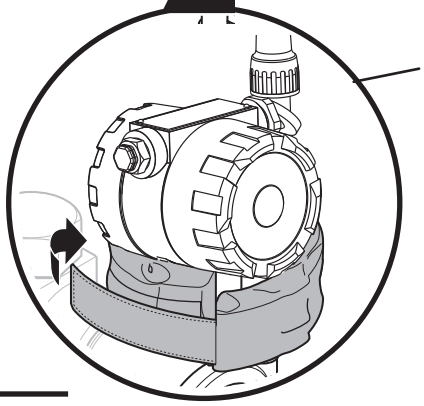

7 Install insulation jacket over Waveguide and transmitter mounting stem in cold climates where accelerated heat loss may occur.

Consult Factory if needed.

8 Confirm caps are tightened to 25 ft-lb (34 N-m).

Product Labels

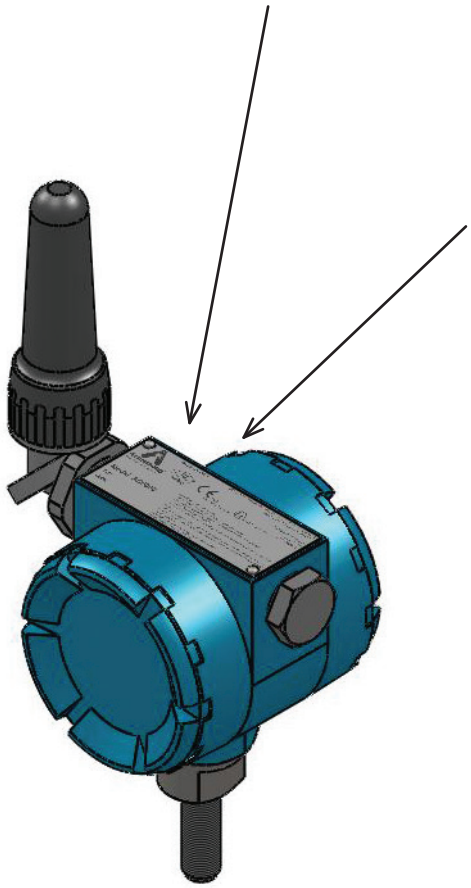

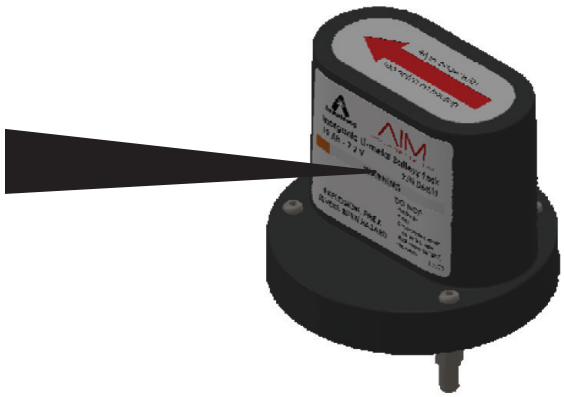

Product Specifications and Certifications

UL LLC Approval	
United States	Intrinsic Safe for Class I/II/III, Division 1, Groups A, B, C, D, E, F, and G Zone 0, for Class I, Group IIC Temperature Code: T4 [275ºF (135ºC)] Ambient Temperature Range: T_{amb} -40ºC to 70ºC (-40ºF to 158ºF) For use with Armstrong model D64519 lithium metal battery only Standards used for Compliance: UL 913, Ed. 8; UL 60079-0, Ed. 7; UL 60079-11, Ed. 6
Canada	Intrinsic Safe for Class I/II/III, Division 1, Groups A, B, C, D, E, F, and G Zone 0, Group IIC X Temperature Code: T4 [275ºF (135ºC)] Ambient Temperature Range: T_{amb}-40ºC to 70ºC (-40ºF to 158ºF) For use with Armstrong model D64519 lithium metal battery only Standards used for Compliance: CAN/CSA C22.2 No. 60079-0, Ed. 4 CAN/CSA C22.2 No. 60079-11, Ed. 2
European Certification	ATEX Intrinsic Safety Zone 0, Group IIC Temperature Code: T4 [275ºF (135ºC)] Ambient Temperature Range: T_{amb} -40ºC to 70ºC (-40ºF to 158ºF) For use with Armstrong model D64519 lithium metal battery only Standards used for Compliance: CENELEC EN IEC 60079-0, Issue date: 07/2018; CENELEC EN 60079-11, Issue date: 01/2012
IECEx Certification	Equipment Protection Level: Ga Zone 0, Group IIC Temperature Code: T4 [275ºF (135ºC)] Ambient Temperature Range: T_{amb} -40ºC to 70ºC (-40ºF to 158ºF) For use with Armstrong model D64519 lithium metal battery only Standards used for Compliance: IEC 60079-0, Ed. 7; IEC 60079-11, Ed. 6

EMC Compliance

FCC Part 15 Subpart B, Section 15.101; ISED Canada, ICES-003., Class A Digital/Device, Sections 15.107(b) and 15.109(b)

Ingress Protection Rating	IP66
Output Signal	WirelessHART protocol over 2.45-GHz, ISM radio band
Temperature Operating Range	-40ºC to 70ºC (-40ºF to 158ºF)
Materials of Construction	Housing – Low Cu, Al alloy Paint – Powder Coat O-ring – EPDM Stem – 304 SS Antenna – Nylon 6,6 Nameplate – 316 SS
Battery Type	Encapsulated, Lithium Metal Cells
Weight	4.1 lbs (1.9 Kg)

CE Mark -	
EU Directives	**Test Standards**
ATEX 2014/34/EU	CENELEC EN IEC 60079-0 (07/2018) CENELEC EN 60079-11 (01/2012)
EMC 2014/30/EU	IEC 61326-1 2012; IEC 61000-4-8
LVD 2014/35/EU	EN 62368-1:2014 + A11:2017
RED 2014/53/EU	(ETSI) EN 301 489-1 V2.1.1 (2017-02) (ETSI) EN 301 489-17 V3.1.1 (2017-03)
RoHS 3 2015/863	Conformance or compliance assessment from suppliers

Product Certifications

Hazardous Location / Explosive Atmosphere Ratings

North American
UL - US and CA
Class I, II, III; Division 1; Group A,B,C,D,E,F and G
Class I, Zone 0 AEx ia IIC T4
Ex ia IIC T4 X
T4 at T ambient = -40ºC to 70ºC (-40ºF to 158ºF)

European and International
ATEX and IECEx
Ex ia IIC T4 Ga
Ex II 1 G Ex ia IIC T4 Ga

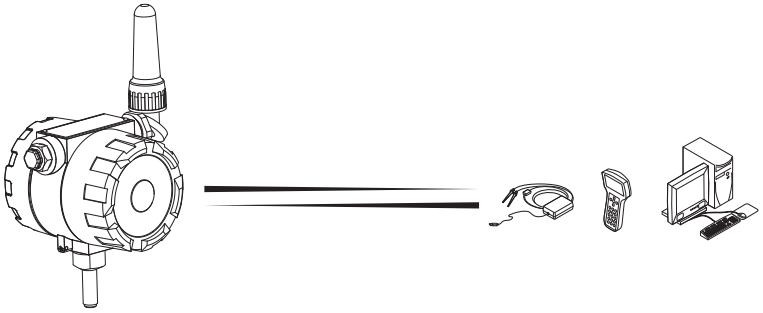

Notes:

1. Install per the National Electrical Code, ANSI/ISA-RP12.06.01, the Canadian Electrical Code, and applicable European or other international installation codes, including EN / IEC 60079-14, as applicable.
2. Selected intrinsically-safe (I.S.) equipment must be third party listed as intrinsically-safe for the application environment. Any selected I.S. equipment connecting to the AIM AD5000 and ST5700 shall have entity parameters conforming to Table 1, below.

Table 1: Entity Parameters for Field-Connected, Intrinsically Safe Equipment and the AIM AD5000 and ST5700

Electrical Parameter	I.S. Equipment		AIM AD5000 and ST5700	
	Terminology	Value Must Be:	Terminology	Value & Units
Potential, maximum	V_{max} (or U_i)	> or =	U_o	5.36 VDC
Current, maximum	I_{max} (or I_i)	> or =	I_o	0.43 A
Power, maximum	P_{max} (or P_i)	> or =	P_o	0.577 W
Capacitance, combined	$C_i + C_{cable}$	< or =	C_o	66.54 µF
Inductance, combined	$L_i + L_{cable}$	< or =	L_o	0.031 µH

Notes on Table 1:
a. "> or =" means "greater than or equal to"
b. "< or =" means "less than or equal to"
c. Combined capacitance and inductance for a field-connected device (entity) are the sums of both the device and connecting cable parameters.
d. The electrical parameters listed in Table 1 are measured across terminals TB3 and TB4 of the monitor.

3. The AIM AD5000 and ST5700 may also be connected to simple apparatus as defined in Article 504.2 and installed and temperature classified in accordance with Article 504.10(D) of the National Electrical Code (ANSI/NFPA 70), or other local codes, as applicable.
4. Capacitance and inductance of the field wiring from the intrinsically safe equipment to the AIM AD5000 and ST5700 shall be calculated and must be included in the system calculations as shown in Table 1. Cable capacitance, Ccable, plus intrinsically safe equipment capacitance, Ci must be less than the marked capacitance, Ca (or Co), shown on the AIM ST5700. The same applies for inductance (Lcable, Li and La or Lo, respectively). Where the cable capacitance and inductance per foot are not known, the following values shall be used: Ccable = 60 pF/ft. (200pF/m), Lcable = 0.2 µH/ft (1.0µH/m).
5. Intrinsically safe circuits must be wired and separated in accordance with Article 504.20 of the National Electrical Code (ANSI/NFPA 70) or other local codes, as applicable.
6. The AIM AD5000 and ST5700 have not been evaluated for use in combination with another associated apparatus.
7. For installations in which both the Ci and Li of the intrinsically safe apparatus exceeds 1% of the Ca (or Co) and La (or Lo) parameters of the AIM AD5000 and ST5700 (excluding the cable), then 50% of Ca (or Co) and La (or Lo) parameters are applicable and shall not be exceeded. The reduced capacitance shall not be greater than 1 µF for Groups C and/or D (IIB), and 600 nF for Groups A and B (IIC). The values of Ca (or Co) and La (or Lo) determined by this method shall not be exceeded by the sum of all of Ci plus cable capacitances and the sum of all of the Li plus cable inductances in the circuit respectively.

Limited Warranty and Remedy

Armstrong International, Inc. or the Armstrong division that sold the product ("Armstrong") warrants to the original user of those products supplied by it and used in the service and in the manner for which they are intended, that such products shall be free from defects in material and workmanship for a period of one (1) year from the date of installation, but not longer than 15 months from the date of shipment from the factory, [unless a Special Warranty Period applies, as listed below]. This warranty does not extend to any product that has been subject to misuse, neglect or alteration after shipment from the Armstrong factory. Except as may be expressly provided in a written agreement between Armstrong and the user, which is signed by both parties, Armstrong **DOES NOT MAKE ANY OTHER REPRESENTATIONS OR WARRANTIES, EXPRESS OR IMPLIED, INCLUDING, BUT NOT LIMITED TO, ANY IMPLIED WARRANTY OF MERCHANTABILITY OR ANY IMPLIED WARRANTY OF FITNESS FOR A PARTICULAR PURPOSE.**

The sole and exclusive remedy with respect to the above limited warranty or with respect to any other claim relating to the products or to defects or any condition or use of the products supplied by Armstrong, however caused, and whether such claim is based upon warranty, contract, negligence, strict liability, or any other basis or theory, is limited to Armstrong's repair or replacement of the part or product, excluding any labor or any other cost to remove or install said part or product, or at Armstrong's option, to repayment of the purchase price. As a condition of enforcing any rights or remedies relating to Armstrong products, notice of any warranty or other claim relating to the products must be given in writing to Armstrong: (i) within 30 days of last day of the applicable warranty period, or (ii) within 30 days of the date of the manifestation of the condition or occurrence giving rise to the claim, whichever is earlier. **IN NO EVENT SHALL ARMSTRONG BE LIABLE FOR SPECIAL, DIRECT, INDIRECT, INCIDENTAL OR CONSEQUENTIAL DAMAGES, INCLUDING, BUT NOT LIMITED TO, LOSS OF USE OR PROFITS OR INTERRUPTION OF BUSINESS.** The Limited Warranty and Remedy terms herein apply notwithstanding any contrary terms in any purchase order or form submitted or issued by any user, purchaser, or third party and all such contrary terms shall be deemed rejected by Armstrong.

Notes

Notes

ARMSTRONG INTELLIGENT MONITORING

For more information, please contact the Smart Services Group at 269-273-1415,
or at: smartservices@**armstrong**international.com.

Designs, materials, weights and performance ratings are approximate and subject to change without notice.
Visit **armstrong**international.com for up-to-date information.

Armstrong International
North America • Latin America • India • Europe / Middle East / Africa • China • Pacific Rim
armstronginternational.com