APPROVAL

BY:_____ DATE:_____

- ☐ APPROVED, PROCEED WITH FABRICATION
- ☐ APPROVED AS NOTED, PROCEED WITH FABRICATION IN ACCORDANCE WITH COMMENTS
- ☐ DISAPPROVED, DO NOT FABRICATE

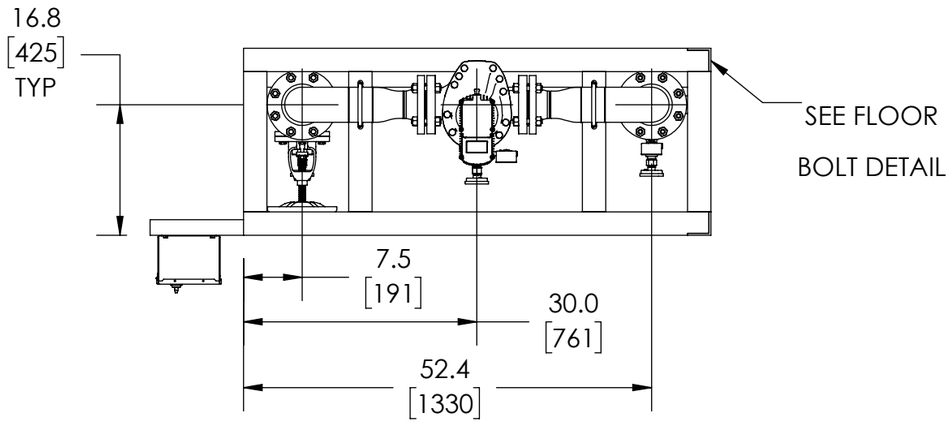

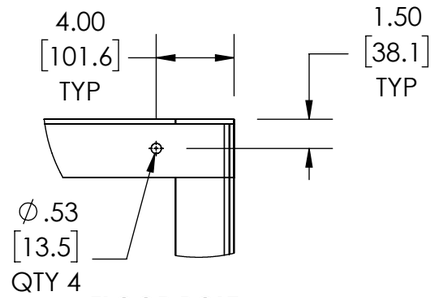

FLOOR BOLT LOCATION

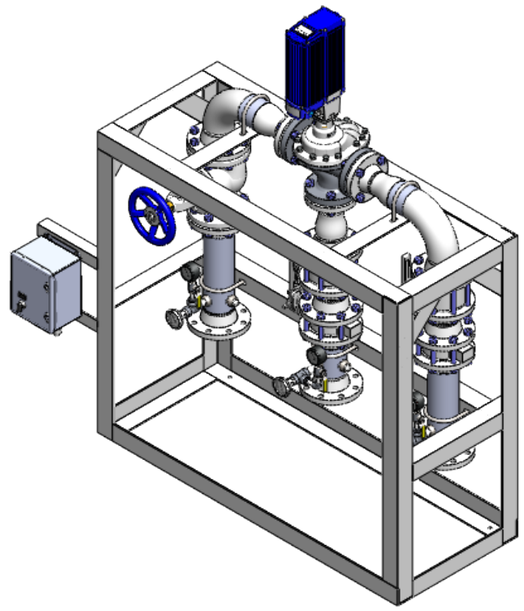

INDUSTRIAL MIXING CENTER

ITEM NO.	DESCRIPTION	CONNECTION
1	HOT WATER INLET	4" FLG ANSI 150
2	COLD WATER INLET	4" FLG ANSI 150
3	MIXED OUTLET	4" FLG ANSI 150
4	E80WR	3" FLG ANSI 150
5	ELECTRICAL PANEL	120/240 VAC 1.8/.9A
6	THERMOMETER (3)	1/2" NPT
7	PRESSURE GAUGE (3)	1/4" NPT
8	INSTRUMENTATION EXPANSION PORT (3)	3/4" NPT
9	BUTTERFLY VALVE (2)	4" FLG ANSI 150
10	CHECK VALVE (2)	4" FLG ANSI 150
11	GLOBE VALVE	4" FLG ANSI 150

ITEM	MATERIAL
PIPING	316 STAINLESS STEEL
STAND	304 STAINLESS STEEL

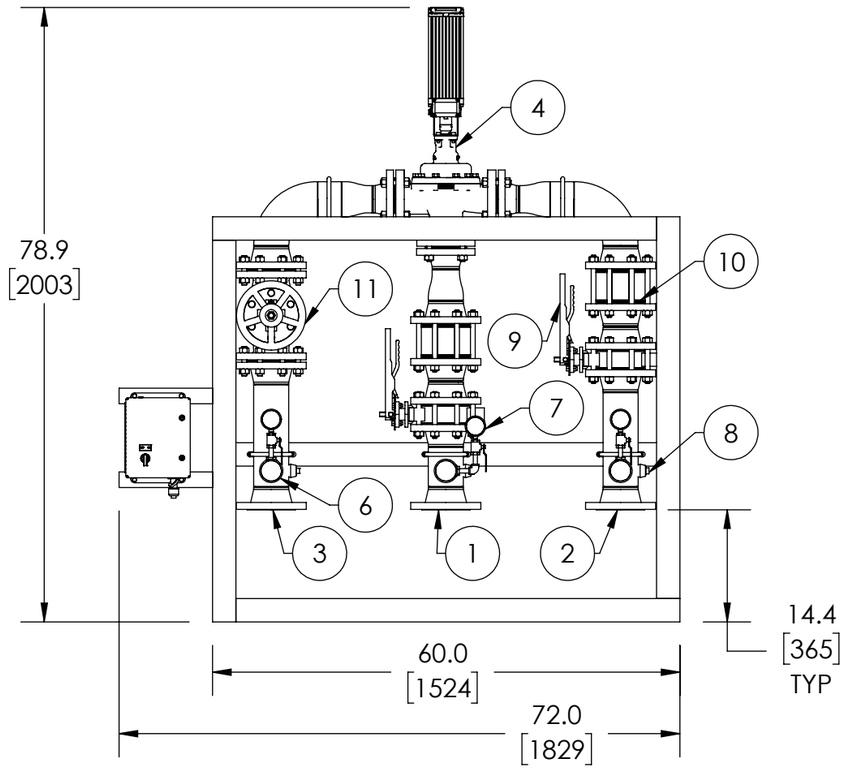

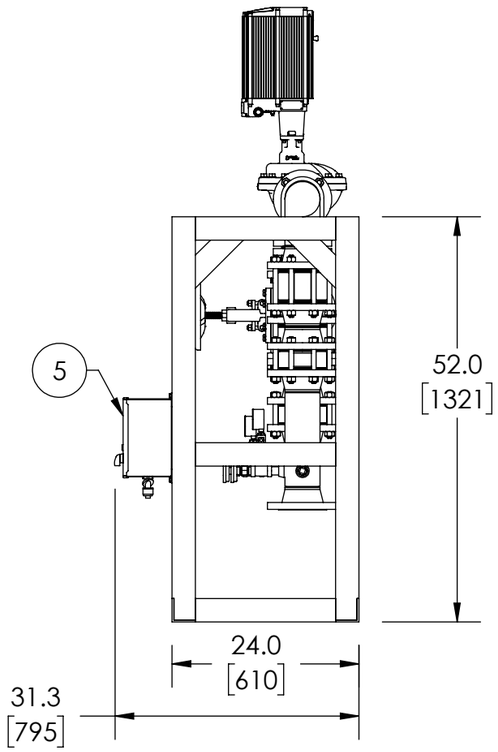

NOTE(S):

1. ALL DIMENSIONS +/-1.0 [25] UNLESS OTHERWISE SHOWN.
2. EMECH AND POWER SUPPLY ARE PREWIRED TO PROVIDE A SINGLE ELECTRICAL LANDING POINT AT THE PANEL.

DO NOT SCALE DRAWING

TOLERANCES UNLESS OTHERWISE SPECIFIED

DIMENSIONING ENGLISH [mm]

FRACTIONAL ± 1/64
ANGULAR: ± 2

		IN.	MM
DECIMAL	.XXXX ±	.0005	----
	.XXX ±	.005	.010
	.XX ±	.015	.10
	.X	----------	.3

Armstrong®

	NAME	DATE
DRAWN	CFG	5/18/2015
RELEASED		

ARMSTRONG INTERNATIONAL

Copyright © 2010 ARMSTRONG INTERNATIONAL, INC.

IMC80GD

MATERIAL

SHEET 1 OF 1

REV

SALES