# APPROVAL

BY:_____ DATE:_____

- ☐ APPROVED, PROCEED WITH FABRICATION
- ☐ APPROVED AS NOTED, PROCEED WITH FABRICATION IN ACCORDANCE WITH COMMENTS
- ☐ DISAPPROVED, DO NOT FABRICATE

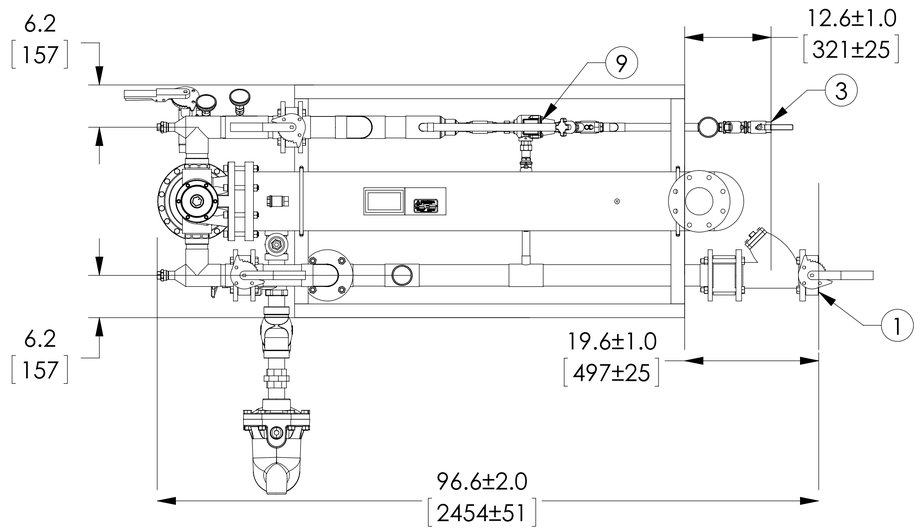


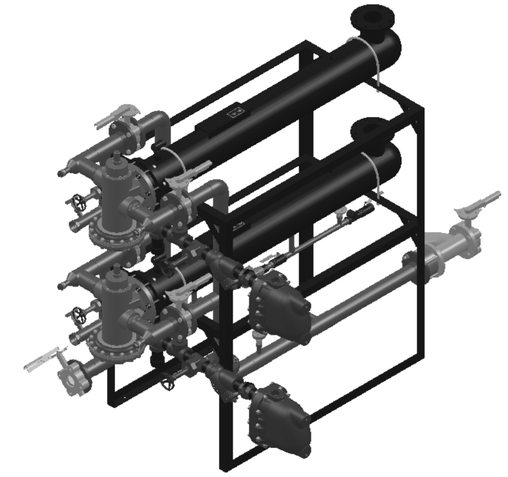

FLO-RITE-TEMP STEAM/WATER
HEAT EXCHANGER DOUBLE WALL

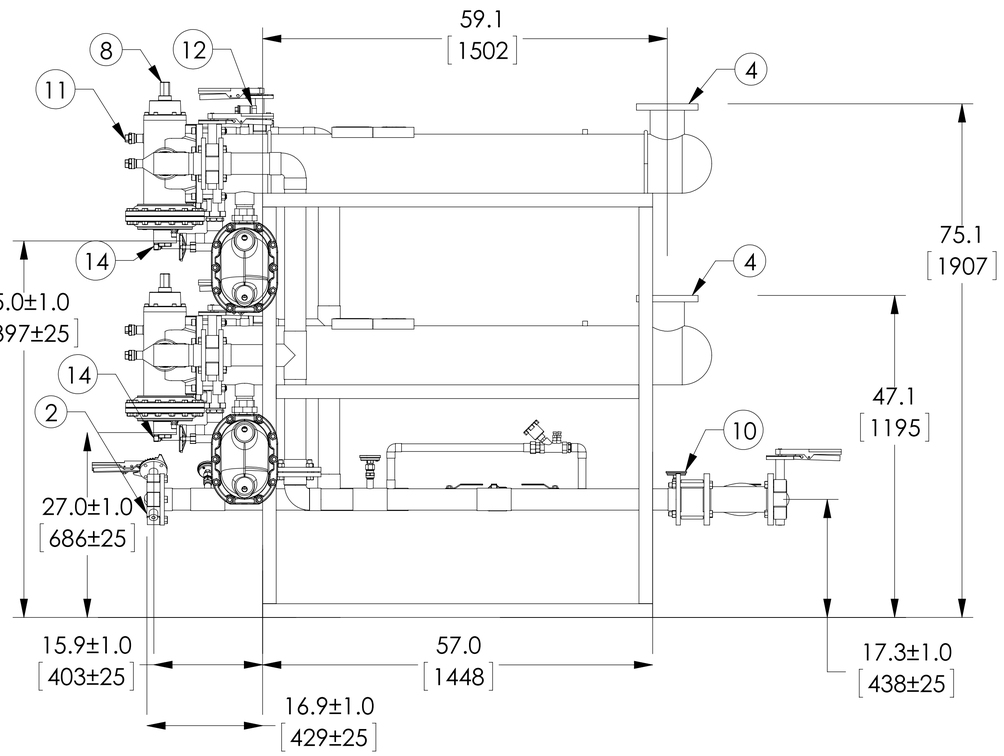


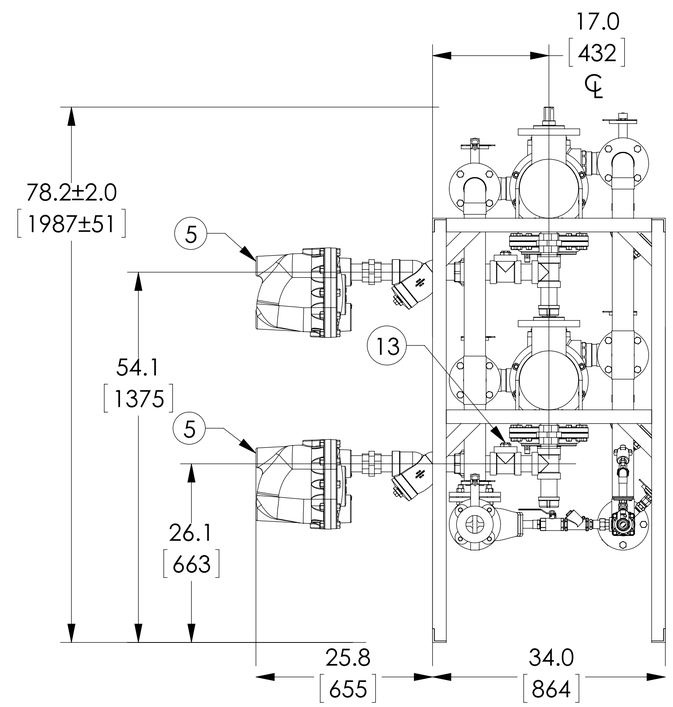


PROJECT NAME :

TAG :

| ITEM | DESCRIPTION | CONNECTION |
|---|---|---|
| 1 | COLD WATER INLET | 3" FLG ANSI 150 |
| 2 | HOT WATER OUTLET | 3" FLG ANSI 150 |
| 3 | RECIRC WATER INLET | 1" NPT |
| 4 | STEAM INLET | 4" FLG ANSI 150 |
| 5 | CONDENSATE OUTLET | 2" NPT 20-JD8 F&T |
| 6 | N/A | N/A |
| 7 | N/A | N/A |
| 8 | CONTROL VALVE LT | 3" NPT |
| 9 | FLUID POWER VALVE | 1" NPT |
| 10 | THERMOMETER (5) | |
| 11 | CIP CONNECTION (4) | 1" NPT |
| 12 | AIR VENT (2) | 3/4" NPT |
| 13 | VACUUM BREAKER (2) | 1/2" NPT |
| 14 | BYPASS TO DRAIN (2) | 2" NPT |

| ITEM | MATERIAL |
|---|---|
| PIPING | COPPER TYPE "L" |
| EXCHANGER SHELL MATL. | CARBON STEEL |
| EXCHANGER TUBE MATL. | COPPER |
| | |
| SET POINT | 100˚F |

NOTE(S):

1. ARMSTRONG PART NUMBER : D611772
2. ALL DIMENSIONS +/- 0.5[13] UNLESS OTHERWISE SHOWN.
3. COMPLETE ASSEMBLY LEAD FREE COMPLIANT - THE WETTED SURFACE OF THIS PRODUCT CONTACTED BY CONSUMABLE WATER CONTAINS LESS THAN ONE QUARTER OF ONE PERCENT (0.25%) OF LEAD BY WEIGHT.
4. N/A.

DO NOT SCALE DRAWING
TOLERANCES UNLESS OTHERWISE SPECIFIED
DIMENSIONING ENGLISH [mm]

FRACTIONAL ± 1/64
ANGULAR: ± 2

| | | IN. | MM |
|---|---|---|---|
| DECIMAL | .XXXX ± | .0005 | ----- |
| | .XXX ± | .005 | .010 |
| | .XX ± | .015 | .10 |
| | .X | --------- | .3 |

Armstrong®

| | NAME | DATE |
|---|---|---|
| DRAWN | CFG | 7/17/2014 |
| RELEASED | SALES | |

ARMSTRONG INTERNATIONAL

Copyright © 2010 ARMSTRONG INTERNATIONAL, INC.

FRT8120DWPR100F 3 FLG 3 FLG 1
NPT CPR

CONFIG# (C-147837)

MATERIAL

SHEET 1 OF 1

REV A

DWG. SALES