APPROVAL

BY:_____ DATE:_____

- ☐ APPROVED, PROCEED WITH FABRICATION
- ☐ APPROVED AS NOTED, PROCEED WITH FABRICATION IN ACCORDANCE WITH COMMENTS
- ☐ DISAPPROVED, DO NOT FABRICATE

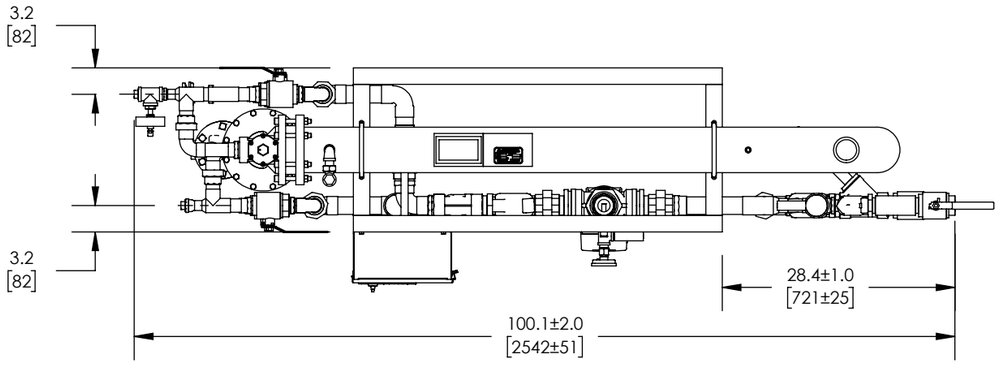

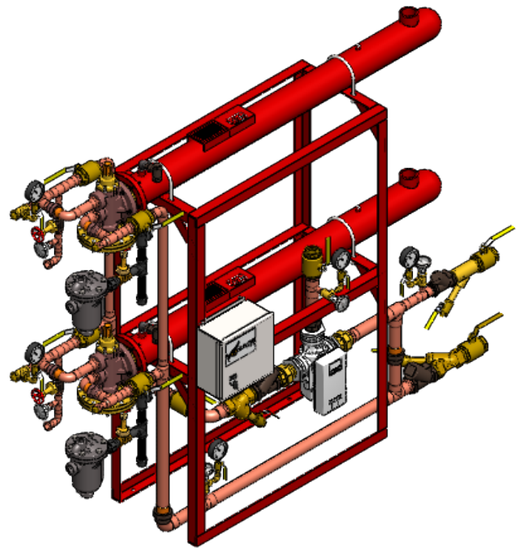

FLO-RITE-TEMP

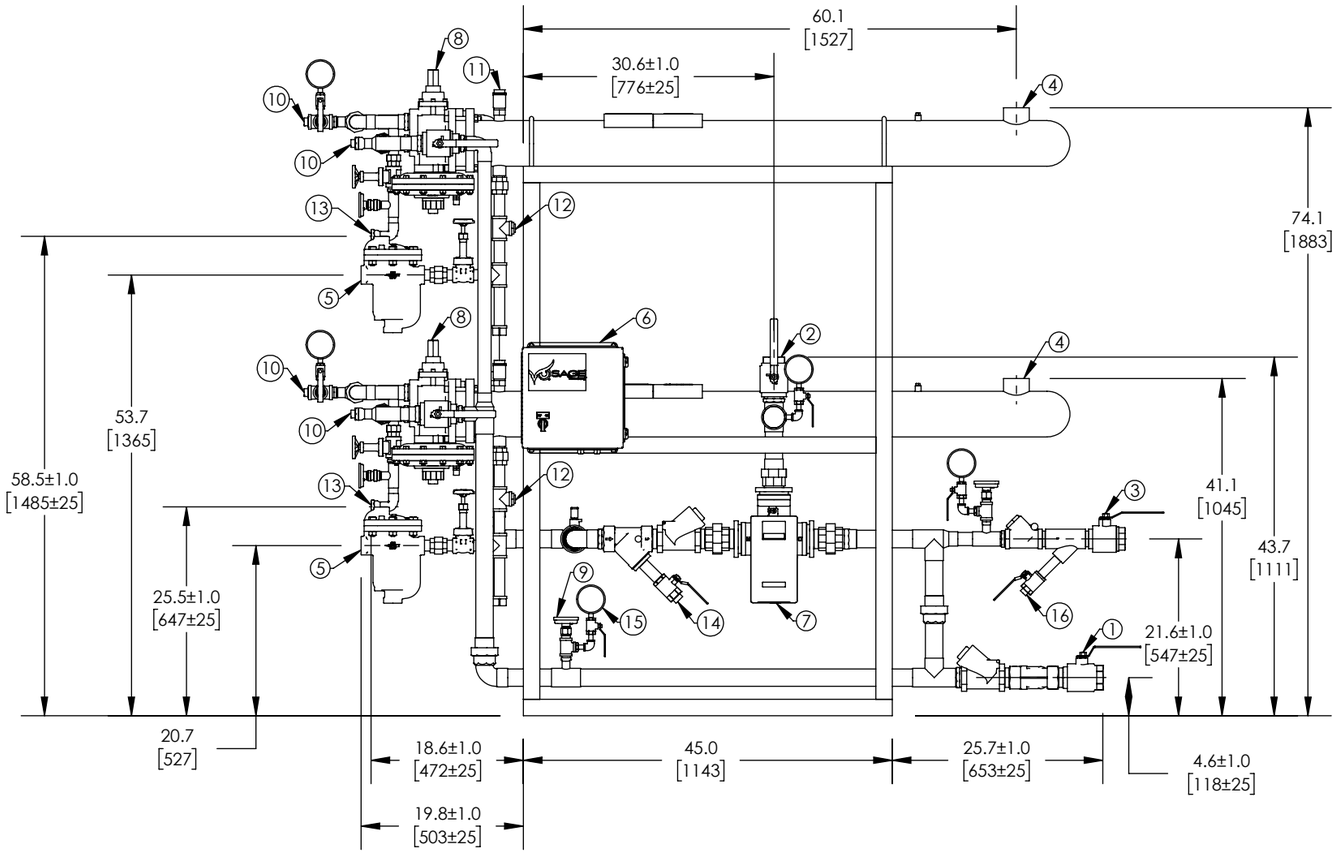

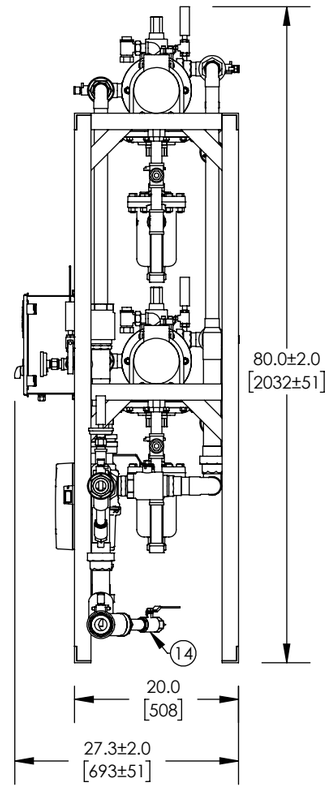

ITEM	DESCRIPTION	CONNECTION
1	COLD WATER INLET	2" NPT
2	MIXED WATER OUTLET	2" NPT
3	RECIRC WATER INLET	1-1/2" NPT
4	STEAM INLET (2)	2-1/2" NPT
5	CONDENSATE OUTLET (2)	1" NPT 813IB
6	ELECTRICAL PANEL	110 VAC @1.2A
7	DRV50	2" NPT
8	CONTROL VALVE (2)	1-1/2 NPT
9	THERMOMETER(5)	1/2" NPT
10	CIP CONNECTION(4)	1" NPT
11	AIR VENT (2)	3/4" NPT
12	VACUUM BREAKER (2)	1/2" NPT
13	BYPASS TO DRAIN (2)	1" NPT
14	BLOW DOWN(2)	1" NPT
15	PRESSURE GAUGE (5)	1/4" NPT
16	BLOWDOWN	3/4" NPT

ITEM	MATERIAL
PIPING	COPPER TYPE "L"
EXCHANGER SHELL MATL.	CARBON STEEL
EXCHANGER TUBE MATL.	COPPER

NOTE(S):

1. ALL DIMENSIONS +/-0.5 [13] UNLESS OTHERWISE SHOWN.
2. COMPLETE ASSEMBLY LEAD FREE COMPLIANT - THE WETTED SURFACE OF THIS PRODUCT CONTACTED BY CONSUMABLE WATER CONTAINS LESS THAN ONE QUARTER OF ONE PERCENT (0.25%) OF LEAD BY WEIGHT.
3. PACKAGE INCLUDES ALL REQUIRED INLET CHECK VALVES, ISOLATION VALVES, AND STRAINERS ON DOMESTIC SIDE.
4. DRV AND ELECTRICAL PANEL ARE PREWIRED TO PROVIDE A SINGLE ELECTRICAL LANDING POINT AT THE PANEL.

DO NOT SCALE DRAWING

TOLERANCES UNLESS OTHERWISE SPECIFIED

DIMENSIONING ENGLISH [mm]

FRACTIONAL ± 1/64
ANGULAR: ± 2

		IN.	MM
DECIMAL	.XXXX ±	.0005	-----
	.XXX ±	.005	.010
	.XX ±	.015	.10
	.X	----------	.3

Armstrong®

	NAME	DATE
DRAWN	CFG	5/18/2015
RELEASED		

ARMSTRONG INTERNATIONAL

Copyright © 2010 ARMSTRONG INTERNATIONAL, INC.

FRT535DWP50BS

MATERIAL

SHEET 1 OF 1

CWF55983 REV C SALES